MBL
ENGINEERING, PLLC

September 16, 2026

City of Rome Planning Board
Attn: Mr. Mark Esposito – Planning Board Chairman
198 North Washington St.
Rome, NY 13440

Re: Nascentia Residential - Subdivision
Potter Road
Rome, NY 13440

Dear Planning Board

A package for the above project located at 7900 Turin Road in the City of Rome has been prepared for Subdivision approval. The project proposes subdividing the 4 existing parcels to create 84 Lots which includes the existing offices, existing motel, 6 single family dwellings, 34 duplex buildings and 6 six plex buildings. The project within the PD will include private storm and road infrastructure and will include sanitary sewer and water infrastructure that will be turned over to the City within easements. The waterline being turned over is approximately 4,025-LF and the sewer line is 3,576-LF with manholes.

- Subdivision Application
- Long Environmental Assessment Form – Part 1, 2 and 3
- Preliminary Plat
- Site Plan Package

Please let me know if I need to provide you with anything else or if you have any questions, please give me a call at 315.486.0501.

Sincerely,

Michael B. Lasell, P.E., LEED AP
MBL Engineering, PLLC

CC:
Nascentia Residential – Cheryl Manna

(p) 315.486.0501 | *(f)*315.295.2569 | 16510 Balch Place Mannsville, NY 13661 | Mike.Lasell@MBLEngineering.com

Appendix A

Subdivision Application

CITY OF ROME PLANNING BOARD

CARE OF: DEPARTMENT OF COMMUNITY AND ECONOMIC DEVELOPMENT
ROME CITY HALL, 198 N. WASHINGTON STREET
ROME, NEW YORK 13440-5815
Telephone: (315) 339-7643 Fax: (315) 838-1167
www.RomeNewYork.com

Application for Planning Board Review

Property Address: 7900 Turin Road, Rome, NY 13440 **County Tax ID #:** 205.019-2-32.1 /205.020-1-16.4

Type of Action Requested

☐ Site Plan Review ☐ Site Plan Revision ☐ Minor Subdivision (less than 5 lots)

☒ Major Subdivision (5 lots or more)
☐ Preliminary Plat ☒ Final Plat

Please fill out all the application forms completely and ensure that you are submitting all required supporting documentation. Review and complete the application checklist form prior to submission to confirm that your application is complete.

A complete application must include, at minimum:

- *Completed Application Form*
- *Application Fee*
- *All Required Submittals*
- *Digital Copy of All Documents*
- *10 Paper Copies of All Documents Printed to Full Original Scale*

*A **complete** application package must be submitted to the City's Department of Community and Economic Development at least sixteen (16) calendar days in advance of the upcoming meeting to be placed on an agenda. **Please note that for review items which require a State Environmental Quality Review (SEQR), by law, each agency that is part of the project review has up to thirty (30) days for comment.** With this in mind, if an item subject to SEQR is submitted at the deadline (16 days prior to the meeting), it is unlikely that the review item will be able to be acted on at the following regular meeting of the planning board.*

The Planning Board generally meets on the first Tuesday of each month, but consult the publicly posted schedule as this can vary as a result of public holidays.

Office Use	Date Received:	Fee Recieved: ☐ Yes ☐ No ☐ N/A

City of Rome, New York
Application for Planning Board Review

Applicant Information

Name: Visiting Nurse Association of Central NY, Inc

Address: 7900 Turin Road, Rome, NY 13440

Phone: 315-477-9594

City: _____ State:_____ Zip:_____

E-Mail: cmanna@nascentiahealth.org

Property Owner Information ■ (Check if same as applicant)

Name: _____

Address: _____

Phone: _____

City: _____ State:_____ Zip:_____

E-Mail: _____

Agent Information

Name: Michael Lasell

Address: 16510 Balch Place

Phone: 315-486-0501

City: Mannsville State: NY Zip: 13661

E-Mail: Mike.Lasell@mblengineering.com

City of Rome, New York
Application for Planning Board Review

Brief Project Summary/Description:

The proposed project is a residential community develop that provides residential living options that includes different living options which include town homes and single family homes. The residential community will offer access to pools, walking trails pickle ball courts to enhance the community. 110 units are proposed with 78 total lots.

Property Zoning: Institutional Campus / R-1-8 Single Family Residential **Property Size:** Combined acerage: 67.77

Current Land Use: Commercial / Vacant Land

Are there any easements or rights-of-way on the property? ■ Yes ☐ No

■ Utility ☐ Right-of-Way ☐ Access ☐ Other

Are there any known archaeological or historically significant features on the property? ■ Yes ☐ No

If yes, please explain: No Impact Letter Received

Are there any federal or state wetlands located on the property? ■ Yes ☐ No

☐ Federal Wetlands ■ New York State Wetlands

Is the property located within a floodplain? ☐ Yes ■ No

☐ 100-Year ☐ 500-Year

City of Rome, New York
Application for Planning Board Review

Site Plan Review Supplement

Please complete this section if you are applying for site plan review

Proposed Building Square Footage:_____

Proposed Building Height:_____

Proposed Lot Coverage:_____

Proposed Impervious Surface Coverage:_____

Proposed Building Setbacks:_____ (Front, Side, Side, Rear)

Breakdown of Proposed Uses by Square Footage:_____

Proposed Number of Residential Units:110_____ (If Applicable)

Does the proposed project involve the construction of wireless telecommunication facilities or infrastructure?

☐ Yes ■ No

Does the proposed project involve the construction of a Tier 2 or Tier 3 Solar Energy Project as defined in the City of Rome Zoning Code?

■ No ☐ Yes, Tier 2 ☐ Yes, Tier 3

Additional information is required for projects involving wireless telecommunication facilities and infrastructure, as well as Tier 2 and 3 solar arrays. For these types of project, please contact the Department of Community and Economic Development for assistance.

Application Submittals Checklist (Site Plan Review)

*This checklist **must** be completed if you are applying for Site Plan Review in order for your application to be considered complete.*

- ■ Completed Application for Planning Board Review
- ■ Application Fee ($50 Minor Site Plan, $250 Major Site Plan) (Make Checks Payable to City of Rome)
- ■ Completed Short or Long Form Environmental Assessment Form, Part 1, As Applicable
- ■ Project Drawings including the following and scaled to no more than 1"=100':
  - ■ Project Title (cover page)
  - ■ Name and address of applicant (all drawings)
  - ■ Name and address of person/firm who prepared the drawings (all drawings)
  - ■ North Arrow and scale (all drawings)
  - ■ Date of drafting and most recent revision (all drawings)
  - ■ Boundaries of property (all drawings)
  - ■ Grading and drainage plan, including both existing and proposed contours
  - ■ Location, type of construction, and exterior dimensions of all buildings
  - ☐ Elevations and design of all proposed buildings
  - ■ Location, design, and type of construction of all parking and loading areas
  - ■ Access and egress for all buildings and parking and loading areas
  - ■ Location, design, and construction details for all existing and proposed site improvements
  - ■ Pedestrian access and circulation
  - ■ Emergency vehicle access and circulation
  - ■ Location, design, and construction details for all utilities provisioning and connection
  - ☐ Location, design, and construction details for all proposed signs
  - ■ Landscaping plan and planting schedule, including proposed buffer areas and vegetative cover
  - ☐ Outdoor lighting plan, including photometrics
  - ☐ Estimated project construction schedule
  - ☐ List of all state and county permits required for the project and their status

Please note that the Planning Board or City departments may, at their discretion, require the submission of additional information beyond what is listed above.

City of Rome, New York
Application for Planning Board Review

Subdivision Supplement

Please complete this section if you are applying for property subdivision.

Existing parcel size(s): 68.91

New parcel sizes: See Plan

Proposed number of parcels to result from subdivision: 84

Will all parcels have frontage on a public right-of-way and take access from it?

☐ Yes ■ No

Does the proposed subdivision anticipate the creation of new roads, power lines, or water and sewer infrastructure that will be maintained by the City of Rome?

Yes, new infrastructure on new private road

For major subdivision - have copies of the proposed plat been sent to the Oneida County Department of Health for approval?

☐ Yes ■ No

Application Submittals Checklist (Pre-Application Conference, Major Subdivision)

- ■ Sketch plan showing a general layout of proposed streets, lots, and other improvements
- ■ Location map indicating the proposed subdivision in relation to the surrounding area
- ■ Depiction of land to be reserved for streets, stormwater management, sewers, water, fire protection, public buildings, utilities, and other facilities
- ☐ Map of general locations of obvious conservation features
- ☐ Conservation Features Inventory (required only if the proposed subdivision contains previously undeveloped or agricultural land)

Application Submittals Checklist (Preliminary Plat, Major Subdivision)

*This checklist **must** be completed if you are applying for property subdivision in order for your application to be considered complete.*

- ■ Completed Application for Planning Board Review
- ■ Application Fee ($150 base fee plus $35 per lot)(Make checks payable to City of Rome)
- ■ Completed Short or Long Form Environmental Assessment Form, Part 1, as applicable
- ☐ Legal description of the parcels resulting from the proposed subdivision
- ■ A preliminary plat map prepared by a Professional Engineer or Licensed Land Surveyor at a scale not exceeding 1”=100’ and showing the following:
  - ■ North arrow and scale bar
  - ■ Name and address of applicant
  - ■ Name, address, and stamp of the Engineer or Land Surveyor who prepared the drawing
  - ■ Layout, number, dimensions, and area of each lot within the proposed subdivision
  - ■ Boundary lines of the proposed parcels, including angles and distances, and a statement of the total areas of those parcels
  - ■ The location, dimensions, and layout of rights-of-way, blocks, easements, improvements, and utilities within and contiguous to the proposed subdivision, as well as the location and dimensions of such major features as railroad lines, waterways, and exceptional topography
  - ■ The location of all existing and proposed connections with existing and proposed water, sewer, and other utility lines, and an indication of provisions for and location of stormwater management facilities
  - ■ If applicable - location, dimensions, and layout of all parcels of land intended to be dedicated for public use or reserved as common space for subdivision property owners (such as parks or walking trails)
  - ■ If applicable - outline and description of all public improvements (such as roads), together with preliminary drawings

Application Submittals Checklist (Final Plat, Major Subdivision)

*This checklist **must** be completed if you are applying for property subdivision in order for your application to be considered complete.*

- ☐ Completed Application for Planning Board Review
- ☐ Formal offers of dedication, when not set forth on the final plat, of any public rights-of-way or parks, accompanied by the appropriate deeds bearing a certification of approval by the City Corporation Counsel.
- ☐ An endorsement from abstract or title company certifying that there are no liens against the land to be subdivided arising from nonpayment of City taxes, water or sewer charges, or fines
- ☐ A preliminary plat map prepared by a Professional Engineer or Licensed Land Surveyor at a scale not exceeding 1"=100' and showing the following:
    - ☐ All information from the approved preliminary plat
    - ☐ Date of preperation of the final plat and by whom it was prepared
    - ☐ The boundary of the plat, based on accurate traverse, with angles and linear dimensions
    - ☐ The exact location, width, and name of all rights-of-way within and adjoining the plat
    - ☐ True angles and distances to the nearest established right-of-way line or official monuments (no less than three)
    - ☐ Municipal, township, county, and section lines accurately tied to the lines of the subdivision by distances and angles
    - ☐ Radii, internal angles, points, curvatures, tangent bearings, and lengths of all arcs
    - ☐ All easements established for public use and utilities
    - ☐ All lot numbers and lot lines, with accurate dimensions given in hundredths of a foot
    - ☐ Accurate outlines of all areas dedicated or reserved for public use, with the proposed uses indicated, and all areas to be reserved for the common use of the property owners, with the proposed uses indicated
- ☐ A certification by all who have an interest in the property to be subdivided, authorizing and acknowledging the preparation of the subdivision plat and the dedication of any thoroughfares and other public areas
- ☐ Documentation of the approval of the City Engineer that the subdivision agrees with the City survey and is mathematically correct
- ☐ Certification from the Oneida County Health Department and any other applicable authorities that the final plat meets required specifications.

City of Rome, New York
Application for Planning Board Review

General Information and Certification

The City of Rome's Planning Board regularly meets the first Tuesday of every month. To be placed on an agenda, a complete application must be submitted to the City's Department of Community and Economic Development at least sixteen (16) calendar days in advance of the upcoming meeting.

Please note that you *must* have a representative in attendance at the meeting in order for your application to be considered.

All required supporting documentation including the required number of copies of plans, documents, drawings and/or other illustrative materials must be submitted in an application packet in order for it to be considered complete. Please refer to the relevant application checklist to confirm that you are submitting all necessary information.

Failure to provide complete information may result in unnecessary delays or revocation of approvals.

I do hereby state that the information submitted is an accurate representation of my request and complete to the best of my knowledge:

Applicant Signature: Cheryl Manna Owner Signature: Cheryl Manna

Date: 9/16/26 Date: 9/16/26

Appendix B

Long Environmental Assessment Form Part 1, 2, 3

Full Environmental Assessment Form
Part 1 - Project and Setting

Instructions for Completing Part 1

Part 1 is to be completed by the applicant or project sponsor. Responses become part of the application for approval or funding, are subject to public review, and may be subject to further verification.

Complete Part 1 based on information currently available. If additional research or investigation would be needed to fully respond to any item, please answer as thoroughly as possible based on current information; indicate whether missing information does not exist, or is not reasonably available to the sponsor; and, when possible, generally describe work or studies which would be necessary to update or fully develop that information.

Applicants/sponsors must complete all items in Sections A & B. In Sections C, D & E, most items contain an initial question that must be answered either "Yes" or "No". If the answer to the initial question is "Yes", complete the sub-questions that follow. If the answer to the initial question is "No", proceed to the next question. Section F allows the project sponsor to identify and attach any additional information. Section G requires the name and signature of the applicant or project sponsor to verify that the information contained in Part 1is accurate and complete.

A. Project and Applicant/Sponsor Information.

Name of Action or Project: Nascentia Neighborhood		
Project Location (describe, and attach a general location map): 7900-7902 Turin Road, Rome, NY		
Brief Description of Proposed Action (include purpose or need): Change in zoning to add an overlay Planned Development District. The district currently is an R-1-8 and Institutional and it is proposed to construct 6 single family homes, 34 duplex buildings and 6 six-plex buildings. The project also includes installation of approximately 4,100-LF of roadway with associated utilities for sewer, water, gas, and electric.		
Name of Applicant/Sponsor: Visiting Nurse Association of Central NY, Inc	Telephone: 315-477-9594 E-Mail: cmanna@477home.org	
Address: 7900 Turin Road		
City/PO: Rome	State: NY	Zip Code: 13440
Project Contact (if not same as sponsor; give name and title/role): Cheryl Manna - CEO	Telephone: 315-477-9594 E-Mail: manna@477home.org	
Address: 7900 Turin Road		
City/PO: Rome	State: NY	Zip Code: 13440
Property Owner (if not same as sponsor):	Telephone: E-Mail:	
Address:		
City/PO:	State:	Zip Code:

B. Government Approvals

B. Government Approvals, Funding, or Sponsorship. ("Funding" includes grants, loans, tax relief, and any other forms of financial assistance.)

Government Entity	If Yes: Identify Agency and Approval(s) Required	Application Date (Actual or projected)
a. City Counsel, Town Board, or Village Board of Trustees ☑Yes ☐No	PD District Formation	4/14/2026
b. City, Town or Village Planning Board or Commission ☑Yes ☐No	Subdivision Approval	4/18/2026
c. City, Town or Village Zoning Board of Appeals ☐Yes ☑No		
d. Other local agencies ☐Yes ☑No		
e. County agencies ☑Yes ☐No	County 239m Referal	By City
f. Regional agencies ☐Yes ☑No		
g. State agencies ☑Yes ☐No	NYS DEC & NYS DOH	
h. Federal agencies ☐Yes ☑No		

i. Coastal Resources.

i. Is the project site within a Coastal Area, or the waterfront area of a Designated Inland Waterway? ☐Yes ☑No

ii. Is the project site located in a community with an approved Local Waterfront Revitalization Program? ☐Yes ☑No

iii. Is the project site within a Coastal Erosion Hazard Area? ☐Yes ☑No

C. Planning and Zoning

C.1. Planning and zoning actions.

Will administrative or legislative adoption, or amendment of a plan, local law, ordinance, rule or regulation be the only approval(s) which must be granted to enable the proposed action to proceed? ☐Yes ☑No

- **If Yes,** complete sections C, F and G.
- **If No,** proceed to question C.2 and complete all remaining sections and questions in Part 1

C.2. Adopted land use plans.

a. Do any municipally- adopted (city, town, village or county) comprehensive land use plan(s) include the site where the proposed action would be located? ☐Yes ☑No

If Yes, does the comprehensive plan include specific recommendations for the site where the proposed action would be located? ☐Yes ☐No

b. Is the site of the proposed action within any local or regional special planning district (for example: Greenway; Brownfield Opportunity Area (BOA); designated State or Federal heritage area; watershed management plan; or other?) ☑Yes ☐No

If Yes, identify the plan(s):

NYS Heritage Areas:Mohawk Valley Heritage Corridor

c. Is the proposed action located wholly or partially within an area listed in an adopted municipal open space plan, or an adopted municipal farmland protection plan? ☐Yes ☑No

If Yes, identify the plan(s):

C.3. Zoning

a. Is the site of the proposed action located in a municipality with an adopted zoning law or ordinance. ☑ Yes ☐ No
If Yes, what is the zoning classification(s) including any applicable overlay district?
I - Institutional Campus and R-1-8 Single Family Residential

b. Is the use permitted or allowed by a special or conditional use permit? ☐ Yes ☑ No

c. Is a zoning change requested as part of the proposed action? ☑ Yes ☐ No
If Yes,
i. What is the proposed new zoning for the site? Planned Developmental District (PD)

C.4. Existing community services.

a. In what school district is the project site located? Rome City School Districts (RCSD)

b. What police or other public protection forces serve the project site?
City of Rome, Oneida County, NYSP

c. Which fire protection and emergency medical services serve the project site?
Stanwix Heights Volunteer Fire Deparment, City of Rome Fire Department or the Floyd Volunteer Fire Department

d. What parks serve the project site?
Dyett Park, Beeches Manor, Rome Sands Plains

D. Project Details

D.1. Proposed and Potential Development

a. What is the general nature of the proposed action (e.g., residential, industrial, commercial, recreational; if mixed, include all components)? Residential and Commercial

b. a. Total acreage of the site of the proposed action? 39.58 acres
b. Total acreage to be physically disturbed? 28.0 acres
c. Total acreage (project site and any contiguous properties) owned or controlled by the applicant or project sponsor? 68.91 acres

c. Is the proposed action an expansion of an existing project or use? ☐ Yes ☑ No
i. If Yes, what is the approximate percentage of the proposed expansion and identify the units (e.g., acres, miles, housing units, square feet)? % _____ Units: _____

d. Is the proposed action a subdivision, or does it include a subdivision? ☑ Yes ☐ No
If Yes,
i. Purpose or type of subdivision? (e.g., residential, industrial, commercial; if mixed, specify types)
Residential
ii. Is a cluster/conservation layout proposed? ☐ Yes ☑ No
iii. Number of lots proposed? 124
iv. Minimum and maximum proposed lot sizes? Minimum 0.07 Maximum 0.79-acres

e. Will the proposed action be constructed in multiple phases? ☐ Yes ☑ No
i. If No, anticipated period of construction: 48 months
ii. If Yes:
- Total number of phases anticipated _____
- Anticipated commencement date of phase 1 (including demolition) _____ month _____ year
- Anticipated completion date of final phase _____ month _____year
- Generally describe connections or relationships among phases, including any contingencies where progress of one phase may determine timing or duration of future phases: _____

f. Does the project include new residential uses? ☑ Yes ☐ No

If Yes, show numbers of units proposed.

	One Family	Two Family	Three Family	Multiple Family (four or more)
Initial Phase				
At completion of all phases	6	34		6

g. Does the proposed action include new non-residential construction (including expansions)? ☐ Yes ☑ No

If Yes,

i. Total number of structures _____

ii. Dimensions (in feet) of largest proposed structure: _____height; _____width; and _____ length

iii. Approximate extent of building space to be heated or cooled: _____ square feet

h. Does the proposed action include construction or other activities that will result in the impoundment of any liquids, such as creation of a water supply, reservoir, pond, lake, waste lagoon or other storage? ☐ Yes ☑ No

If Yes,

i. Purpose of the impoundment: _____

ii. If a water impoundment, the principal source of the water: ☐ Ground water ☐ Surface water streams ☐ Other specify:

_____

iii. If other than water, identify the type of impounded/contained liquids and their source.

_____

iv. Approximate size of the proposed impoundment. Volume: _____ million gallons; surface area: _____ acres

v. Dimensions of the proposed dam or impounding structure: _____ height; _____ length

vi. Construction method/materials for the proposed dam or impounding structure (e.g., earth fill, rock, wood, concrete):

_____

D.2. Project Operations

a. Does the proposed action include any excavation, mining, or dredging, during construction, operations, or both? (Not including general site preparation, grading or installation of utilities or foundations where all excavated materials will remain onsite) ☐ Yes ☑ No

If Yes:

i .What is the purpose of the excavation or dredging? _____

ii. How much material (including rock, earth, sediments, etc.) is proposed to be removed from the site?

- Volume (specify tons or cubic yards): _____
- Over what duration of time? _____

iii. Describe nature and characteristics of materials to be excavated or dredged, and plans to use, manage or dispose of them.

_____

_____

i*v.* Will there be onsite dewatering or processing of excavated materials? ☐ Yes ☐ No

If yes, describe. _____

_____

v. What is the total area to be dredged or excavated? _____acres

vi. What is the maximum area to be worked at any one time? _____ acres

vii. What would be the maximum depth of excavation or dredging? _____ feet

viii. Will the excavation require blasting? ☐ Yes ☐ No

ix. Summarize site reclamation goals and plan: _____

_____

_____

b. Would the proposed action cause or result in alteration of, increase or decrease in size of, or encroachment into any existing wetland, waterbody, shoreline, beach or adjacent area? ☑ Yes ☐ No

If Yes:

i. Identify the wetland or waterbody which would be affected (by name, water index number, wetland map number or geographic description): Wetland ID: RO-1, Class 2, Acres 28.8

_____

ii. Describe how the proposed action would affect that waterbody or wetland, e.g. excavation, fill, placement of structures, or alteration of channels, banks and shorelines. Indicate extent of activities, alterations and additions in square feet or acres:

The plan proposes to create a walking trail that will partially be within the 100-FT adjacent area and wetland. The trail will require a footbridge with culvert within the wetlands. An existing road within the 100-FT Adjacent area will be removed and area will be restored. This is covered under a general permit with the DEC.

iii. Will the proposed action cause or result in disturbance to bottom sediments? ☐ Yes ☑ No

If Yes, describe: _____

iv. Will the proposed action cause or result in the destruction or removal of aquatic vegetation? ☐ Yes ☑ No

If Yes:

- acres of aquatic vegetation proposed to be removed: _____
- expected acreage of aquatic vegetation remaining after project completion: _____
- purpose of proposed removal (e.g. beach clearing, invasive species control, boat access): _____
- proposed method of plant removal: _____
- if chemical/herbicide treatment will be used, specify product(s): _____

v. Describe any proposed reclamation/mitigation following disturbance: _____

c. Will the proposed action use, or create a new demand for water? ☑ Yes ☐ No

If Yes:

i. Total anticipated water usage/demand per day: 27,500 gallons/day

ii. Will the proposed action obtain water from an existing public water supply? ☑ Yes ☐ No

If Yes:

- Name of district or service area: City of Rome Water Department
- Does the existing public water supply have capacity to serve the proposal? ☑ Yes ☐ No
- Is the project site in the existing district? ☑ Yes ☐ No
- Is expansion of the district needed? ☐ Yes ☑ No
- Do existing lines serve the project site? ☑ Yes ☐ No

iii. Will line extension within an existing district be necessary to supply the project? ☑ Yes ☐ No

If Yes:

- Describe extensions or capacity expansions proposed to serve this project:

  Approximately 4,000-LF of new City waterline is proposed to be installed to support the facility.
- Source(s) of supply for the district: _____

iv. Is a new water supply district or service area proposed to be formed to serve the project site? ☐ Yes ☑ No

If, Yes:

- Applicant/sponsor for new district: _____
- Date application submitted or anticipated: _____
- Proposed source(s) of supply for new district: _____

v. If a public water supply will not be used, describe plans to provide water supply for the project: _____

vi. If water supply will be from wells (public or private), what is the maximum pumping capacity: _____ gallons/minute.

d. Will the proposed action generate liquid wastes? ☑ Yes ☐ No

If Yes:

i. Total anticipated liquid waste generation per day: 27,500 gallons/day

ii. Nature of liquid wastes to be generated (e.g., sanitary wastewater, industrial; if combination, describe all components and approximate volumes or proportions of each): _____

Residential Sanitary Wastewater

iii. Will the proposed action use any existing public wastewater treatment facilities? ☑ Yes ☐ No

If Yes:

- Name of wastewater treatment plant to be used: City of Rome Department of Public Works
- Name of district: City of Rome
- Does the existing wastewater treatment plant have capacity to serve the project? ☑ Yes ☐ No
- Is the project site in the existing district? ☑ Yes ☐ No
- Is expansion of the district needed? ☐ Yes ☑ No

- Do existing sewer lines serve the project site? ☑ Yes ☐ No
- Will a line extension within an existing district be necessary to serve the project? ☑ Yes ☐ No

If Yes:

- Describe extensions or capacity expansions proposed to serve this project: _____

Approximately 4,000-LF of new gravity sewer main is proposed.

iv. Will a new wastewater (sewage) treatment district be formed to serve the project site? ☐ Yes ☑ No

If Yes:

- Applicant/sponsor for new district: _____
- Date application submitted or anticipated: _____
- What is the receiving water for the wastewater discharge? _____

v. If public facilities will not be used, describe plans to provide wastewater treatment for the project, including specifying proposed receiving water (name and classification if surface discharge or describe subsurface disposal plans):

vi. Describe any plans or designs to capture, recycle or reuse liquid waste: _____

e. Will the proposed action disturb more than one acre and create stormwater runoff, either from new point sources (i.e. ditches, pipes, swales, curbs, gutters or other concentrated flows of stormwater) or non-point source (i.e. sheet flow) during construction or post construction? ☑ Yes ☐ No

If Yes:

i. How much impervious surface will the project create in relation to total size of project parcel?

_____ Square feet or 7.92 acres (impervious surface)

_____ Square feet or 39.58 acres (parcel size)

ii. Describe types of new point sources. One new discharge point from a spillway is proposed which is to the same design area as existing.

iii. Where will the stormwater runoff be directed (i.e. on-site stormwater management facility/structures, adjacent properties, groundwater, on-site surface water or off-site surface waters)?

Onsite stormwater management and ultimately to the existing wetlands.

- If to surface waters, identify receiving water bodies or wetlands: _____

Wetland to the south of the property.

- Will stormwater runoff flow to adjacent properties? ☐ Yes ☑ No

iv. Does the proposed plan minimize impervious surfaces, use pervious materials or collect and re-use stormwater? ☑ Yes ☐ No

f. Does the proposed action include, or will it use on-site, one or more sources of air emissions, including fuel combustion, waste incineration, or other processes or operations? ☐ Yes ☑ No

If Yes, identify:

i. Mobile sources during project operations (e.g., heavy equipment, fleet or delivery vehicles)

ii. Stationary sources during construction (e.g., power generation, structural heating, batch plant, crushers)

iii. Stationary sources during operations (e.g., process emissions, large boilers, electric generation)

g. Will any air emission sources named in D.2.f (above), require a NY State Air Registration, Air Facility Permit, or Federal Clean Air Act Title IV or Title V Permit? ☐ Yes ☑ No

If Yes:

i. Is the project site located in an Air quality non-attainment area? (Area routinely or periodically fails to meet ambient air quality standards for all or some parts of the year) ☐ Yes ☐ No

ii. In addition to emissions as calculated in the application, the project will generate:

- _____Tons/year (short tons) of Carbon Dioxide (CO_2)
- _____Tons/year (short tons) of Nitrous Oxide (N_2O)
- _____Tons/year (short tons) of Perfluorocarbons (PFCs)
- _____Tons/year (short tons) of Sulfur Hexafluoride (SF_6)
- _____Tons/year (short tons) of Carbon Dioxide equivalent of Hydroflourocarbons (HFCs)
- _____Tons/year (short tons) of Hazardous Air Pollutants (HAPs)

h. Will the proposed action generate or emit methane (including, but not limited to, sewage treatment plants, landfills, composting facilities)? ☐Yes ☑No

If Yes:

i. Estimate methane generation in tons/year (metric): _____

ii. Describe any methane capture, control or elimination measures included in project design (e.g., combustion to generate heat or electricity, flaring): _____

_____

i. Will the proposed action result in the release of air pollutants from open-air operations or processes, such as quarry or landfill operations? ☐Yes ☑No

If Yes: Describe operations and nature of emissions (e.g., diesel exhaust, rock particulates/dust):

_____

_____

j. Will the proposed action result in a substantial increase in traffic above present levels or generate substantial new demand for transportation facilities or services? ☐Yes ☑No

If Yes:

i. When is the peak traffic expected (Check all that apply): ☐ Morning ☐ Evening ☐Weekend ☐ Randomly between hours of _____ to _____.

ii. For commercial activities only, projected number of truck trips/day and type (e.g., semi trailers and dump trucks): _____

_____

iii. Parking spaces: Existing _____ Proposed _____ Net increase/decrease _____

iv. Does the proposed action include any shared use parking? ☐Yes ☑No

v. If the proposed action includes any modification of existing roads, creation of new roads or change in existing access, describe:

_____

vi. Are public/private transportation service(s) or facilities available within ½ mile of the proposed site? ☑Yes ☐No

vii Will the proposed action include access to public transportation or accommodations for use of hybrid, electric or other alternative fueled vehicles? ☐Yes ☑No

viii. Will the proposed action include plans for pedestrian or bicycle accommodations for connections to existing pedestrian or bicycle routes? ☐Yes ☑No

k. Will the proposed action (for commercial or industrial projects only) generate new or additional demand for energy? ☐Yes ☐No

If Yes:

i. Estimate annual electricity demand during operation of the proposed action: _____

_____

ii. Anticipated sources/suppliers of electricity for the project (e.g., on-site combustion, on-site renewable, via grid/local utility, or other):

_____

iii. Will the proposed action require a new, or an upgrade, to an existing substation? ☐Yes ☑No

l. Hours of operation. Answer all items which apply.

i. During Construction:

- Monday - Friday: 7-5
- Saturday: _____
- Sunday: _____
- Holidays: _____

ii. During Operations:

- Monday - Friday: _____
- Saturday: _____
- Sunday: _____
- Holidays: _____

m. Will the proposed action produce noise that will exceed existing ambient noise levels during construction, operation, or both? ☑ Yes ☐ No

If yes:

i. Provide details including sources, time of day and duration:

Typical construction using excavators and dozers.

ii. Will the proposed action remove existing natural barriers that could act as a noise barrier or screen? ☐ Yes ☑ No

Describe: _____

n. Will the proposed action have outdoor lighting? ☑ Yes ☐ No

If yes:

i. Describe source(s), location(s), height of fixture(s), direction/aim, and proximity to nearest occupied structures:

Residential structures will have exterior lighting near entrances, exterior lighting will be utilized in parking area

ii. Will proposed action remove existing natural barriers that could act as a light barrier or screen? ☐ Yes ☑ No

Describe: _____

o. Does the proposed action have the potential to produce odors for more than one hour per day? ☐ Yes ☑ No

If Yes, describe possible sources, potential frequency and duration of odor emissions, and proximity to nearest occupied structures: _____

p. Will the proposed action include any bulk storage of petroleum (combined capacity of over 1,100 gallons) or chemical products 185 gallons in above ground storage or any amount in underground storage? ☐ Yes ☑ No

If Yes:

i. Product(s) to be stored _____

ii. Volume(s) _____ per unit time _____ (e.g., month, year)

iii. Generally, describe the proposed storage facilities:_____

q. Will the proposed action (commercial, industrial and recreational projects only) use pesticides (i.e., herbicides, insecticides) during construction or operation? ☐ Yes ☑ No

If Yes:

i. Describe proposed treatment(s):

ii. Will the proposed action use Integrated Pest Management Practices? ☐ Yes ☐ No

r. Will the proposed action (commercial or industrial projects only) involve or require the management or disposal of solid waste (excluding hazardous materials)? ☐ Yes ☑ No

If Yes:

i. Describe any solid waste(s) to be generated during construction or operation of the facility:

- Construction: _____ tons per _____ (unit of time)
- Operation : _____ tons per _____ (unit of time)

ii. Describe any proposals for on-site minimization, recycling or reuse of materials to avoid disposal as solid waste:

- Construction: _____
- Operation: _____

iii. Proposed disposal methods/facilities for solid waste generated on-site:

- Construction: _____
- Operation: _____

s. Does the proposed action include construction or modification of a solid waste management facility? ☐ Yes ☑ No

If Yes:

i. Type of management or handling of waste proposed for the site (e.g., recycling or transfer station, composting, landfill, or other disposal activities): _____

ii. Anticipated rate of disposal/processing:

- _____ Tons/month, if transfer or other non-combustion/thermal treatment, or
- _____ Tons/hour, if combustion or thermal treatment

iii. If landfill, anticipated site life: _____ years

t. Will the proposed action at the site involve the commercial generation, treatment, storage, or disposal of hazardous waste? ☐ Yes ☑ No

If Yes:

i. Name(s) of all hazardous wastes or constituents to be generated, handled or managed at facility: _____

ii. Generally describe processes or activities involving hazardous wastes or constituents: _____

iii. Specify amount to be handled or generated _____ tons/month

iv. Describe any proposals for on-site minimization, recycling or reuse of hazardous constituents: _____

v. Will any hazardous wastes be disposed at an existing offsite hazardous waste facility? ☐ Yes ☐ No

If Yes: provide name and location of facility: _____

If No: describe proposed management of any hazardous wastes which will not be sent to a hazardous waste facility:

E. Site and Setting of Proposed Action

E.1. Land uses on and surrounding the project site

a. Existing land uses.

i. Check all uses that occur on, adjoining and near the project site.

☐ Urban ☐ Industrial ☑ Commercial ☑ Residential (suburban) ☑ Rural (non-farm)
☑ Forest ☑ Agriculture ☐ Aquatic ☐ Other (specify): _____

ii. If mix of uses, generally describe:

Project area is bordered by an agricultural field to the east, forest and commercial property to the south, residential to the north and west

b. Land uses and covertypes on the project site.

Land use or Covertype	Current Acreage	Acreage After Project Completion	Change (Acres +/-)
• Roads, buildings, and other paved or impervious surfaces	4.83	12.75	+7.92
• Forested	0.0	0.0	0.0
• Meadows, grasslands or brushlands (non-agricultural, including abandoned agricultural)	24.9	0.0	-24.9
• Agricultural (includes active orchards, field, greenhouse etc.)	3.0	0.0	-3.0
• Surface water features (lakes, ponds, streams, rivers, etc.)	0.0	0.0	0.0
• Wetlands (freshwater or tidal)	0.0	0.0	0.0
• Non-vegetated (bare rock, earth or fill)	0.0	0.0	0.0
• Other Describe: Mowed Lawn Areas	0.0	17.0	+17.0

c. Is the project site presently used by members of the community for public recreation? ☐ Yes ☑ No

i. If Yes: explain: _____

d. Are there any facilities serving children, the elderly, people with disabilities (e.g., schools, hospitals, licensed day care centers, or group homes) within 1500 feet of the project site? ☑ Yes ☐ No

If Yes,

i. Identify Facilities:

Kig Kids Christian Preschool

e. Does the project site contain an existing dam? ☐ Yes ☑ No

If Yes:

i. Dimensions of the dam and impoundment:

- Dam height: _____ feet
- Dam length: _____ feet
- Surface area: _____ acres
- Volume impounded: _____ gallons OR acre-feet

ii. Dam's existing hazard classification: _____

iii. Provide date and summarize results of last inspection:

_____

_____

f. Has the project site ever been used as a municipal, commercial or industrial solid waste management facility, or does the project site adjoin property which is now, or was at one time, used as a solid waste management facility? ☐ Yes ☑ No

If Yes:

i. Has the facility been formally closed? ☐ Yes ☐ No

- If yes, cite sources/documentation: _____

ii. Describe the location of the project site relative to the boundaries of the solid waste management facility:

_____

_____

iii. Describe any development constraints due to the prior solid waste activities: _____

_____

g. Have hazardous wastes been generated, treated and/or disposed of at the site, or does the project site adjoin property which is now or was at one time used to commercially treat, store and/or dispose of hazardous waste? ☐ Yes ☑ No

If Yes:

i. Describe waste(s) handled and waste management activities, including approximate time when activities occurred:

_____

_____

h. Potential contamination history. Has there been a reported spill at the proposed project site, or have any remedial actions been conducted at or adjacent to the proposed site? ☐ Yes ☑ No

If Yes:

i. Is any portion of the site listed on the NYSDEC Spills Incidents database or Environmental Site Remediation database? Check all that apply: ☐ Yes ☐ No

☐ Yes – Spills Incidents database Provide DEC ID number(s): _____

☐ Yes – Environmental Site Remediation database Provide DEC ID number(s): _____

☐ Neither database

ii. If site has been subject of RCRA corrective activities, describe control measures:_____

_____

_____

iii. Is the project within 2000 feet of any site in the NYSDEC Environmental Site Remediation database? ☐ Yes ☑ No

If yes, provide DEC ID number(s): _____

iv. If yes to (i), (ii) or (iii) above, describe current status of site(s):

_____

_____

v. Is the project site subject to an institutional control limiting property uses? ☐ Yes ☐ No

- If yes, DEC site ID number: _____
- Describe the type of institutional control (e.g., deed restriction or easement): _____
- Describe any use limitations: _____
- Describe any engineering controls: _____
- Will the project affect the institutional or engineering controls in place? ☐ Yes ☐ No
- Explain: _____

E.2. Natural Resources On or Near Project Site

a. What is the average depth to bedrock on the project site? >6 feet

b. Are there bedrock outcroppings on the project site? ☐ Yes ☑ No
If Yes, what proportion of the site is comprised of bedrock outcroppings? _____%

c. Predominant soil type(s) present on project site:

A: Alton Gravelly loam 3%	48.2 %
A: Alton Gravelly loam 3-8%	32.8 %
A/D: Castile Gravelly Loam	12.5 %

d. What is the average depth to the water table on the project site? Average: >6 feet

e. Drainage status of project site soils:

☑ Well Drained:	96 % of site
☑ Moderately Well Drained:	4 % of site
☐ Poorly Drained	_____% of site

f. Approximate proportion of proposed action site with slopes:

☑ 0-10%:	81 % of site
☑ 10-15%:	2 % of site
☐ 15% or greater:	_____% of site

g. Are there any unique geologic features on the project site? ☐ Yes ☑ No
If Yes, describe: _____

h. Surface water features.

i. Does any portion of the project site contain wetlands or other waterbodies (including streams, rivers, ponds or lakes)? ☑ Yes ☐ No

ii. Do any wetlands or other waterbodies adjoin the project site? ☑ Yes ☐ No

If Yes to either *i* or *ii*, continue. If No, skip to E.2.i.

iii. Are any of the wetlands or waterbodies within or adjoining the project site regulated by any federal, state or local agency? ☑ Yes ☐ No

iv. For each identified regulated wetland and waterbody on the project site, provide the following information:

- Streams: Name 899-99 Classification D
- Lakes or Ponds: Name _____ Classification _____
- Wetlands: Name Federal Waters, Federal Waters, Federal Waters,... Approximate Size _____
- Wetland No. (if regulated by DEC) _____

v. Are any of the above water bodies listed in the most recent compilation of NYS water quality-impaired waterbodies? ☐ Yes ☑ No

If yes, name of impaired water body/bodies and basis for listing as impaired: _____

i. Is the project site in a designated Floodway? ☐ Yes ☑ No

j. Is the project site in the 100-year Floodplain? ☐ Yes ☑ No

k. Is the project site in the 500-year Floodplain? ☐ Yes ☑ No

l. Is the project site located over, or immediately adjoining, a primary, principal or sole source aquifer? ☑ Yes ☐ No
If Yes:

i. Name of aquifer: Principal Aquifer

m. Identify the predominant wildlife species that occupy or use the project site:
Whitetail Deer Turkeys Squirrels

n. Does the project site contain a designated significant natural community? ☐ Yes ☑ No
If Yes:
i. Describe the habitat/community (composition, function, and basis for designation): _____
ii. Source(s) of description or evaluation: _____
iii. Extent of community/habitat:
- Currently: _____ acres
- Following completion of project as proposed: _____ acres
- Gain or loss (indicate + or -): _____ acres

o. Does project site contain any species of plant or animal that is listed by the federal government or NYS as endangered or threatened, or does it contain any areas identified as habitat for an endangered or threatened species? ☐ Yes ☑ No

If Yes:
i. Species and listing (endangered or threatened): _____

p. Does the project site contain any species of plant or animal that is listed by NYS as rare, or as a species of special concern? ☐ Yes ☑ No

If Yes:
i. Species and listing: _____

q. Is the project site or adjoining area currently used for hunting, trapping, fishing or shell fishing? ☐ Yes ☑ No
If yes, give a brief description of how the proposed action may affect that use: _____

E.3. Designated Public Resources On or Near Project Site

a. Is the project site, or any portion of it, located in a designated agricultural district certified pursuant to Agriculture and Markets Law, Article 25-AA, Section 303 and 304? ☑ Yes ☐ No
If Yes, provide county plus district name/number: ONEI002

b. Are agricultural lands consisting of highly productive soils present? ☐ Yes ☑ No
i. If Yes: acreage(s) on project site? _____
ii. Source(s) of soil rating(s): _____

c. Does the project site contain all or part of, or is it substantially contiguous to, a registered National Natural Landmark? ☐ Yes ☑ No
If Yes:
i. Nature of the natural landmark: ☐ Biological Community ☐ Geological Feature
ii. Provide brief description of landmark, including values behind designation and approximate size/extent: _____

d. Is the project site located in or does it adjoin a state listed Critical Environmental Area? ☐ Yes ☑ No
If Yes:
i. CEA name: _____
ii. Basis for designation: _____
iii. Designating agency and date: _____

e. Does the project site contain, or is it substantially contiguous to, a building, archaeological site, or district which is listed on the National or State Register of Historic Places, or that has been determined by the Commissioner of the NYS Office of Parks, Recreation and Historic Preservation to be eligible for listing on the State Register of Historic Places? ☑ Yes ☐ No

If Yes:

i. Nature of historic/archaeological resource: ☐ Archaeological Site ☑ Historic Building or District

ii. Name: The Beeches

iii. Brief description of attributes on which listing is based:

f. Is the project site, or any portion of it, located in or adjacent to an area designated as sensitive for archaeological sites on the NY State Historic Preservation Office (SHPO) archaeological site inventory? ☑ Yes ☐ No

g. Have additional archaeological or historic site(s) or resources been identified on the project site? ☐ Yes ☑ No

If Yes:

i. Describe possible resource(s): _____

ii. Basis for identification: _____

h. Is the project site within fives miles of any officially designated and publicly accessible federal, state, or local scenic or aesthetic resource? ☐ Yes ☑ No

If Yes:

i. Identify resource: _____

ii. Nature of, or basis for, designation (e.g., established highway overlook, state or local park, state historic trail or scenic byway, etc.): _____

iii. Distance between project and resource: _____ miles.

i. Is the project site located within a designated river corridor under the Wild, Scenic and Recreational Rivers Program 6 NYCRR 666? ☐ Yes ☑ No

If Yes:

i. Identify the name of the river and its designation: _____

ii. Is the activity consistent with development restrictions contained in 6NYCRR Part 666? ☐ Yes ☑ No

F. Additional Information

Attach any additional information which may be needed to clarify your project.

If you have identified any adverse impacts which could be associated with your proposal, please describe those impacts plus any measures which you propose to avoid or minimize them.

G. Verification

I certify that the information provided is true to the best of my knowledge.

Applicant/Sponsor Name Michael Lasell Date 4/14/2026

Signature Michael R Lasell Title Engineer

PRINT FORM

EAF Mapper Summary Report

Tuesday, March 3, 2026 11:44 AM



Disclaimer: The EAF Mapper is a screening tool intended to assist project sponsors and reviewing agencies in preparing an environmental assessment form (EAF). Not all questions asked in the EAF are answered by the EAF Mapper. Additional information on any EAF question can be obtained by consulting the EAF Workbooks. Although the EAF Mapper provides the most up-to-date digital data available to DEC, you may also need to contact local or other data sources to confirm data provided by the Mapper or to obtain data not provided by the Mapper.



B.i.i [Coastal or Waterfront Area]	No
B.i.ii [Local Waterfront Revitalization Area]	No
C.2.b. [Special Planning District]	Yes - Digital mapping data are not available for all Special Planning Districts. Refer to EAF Workbook.
C.2.b. [Special Planning District - Name]	NYS Heritage Areas:Mohawk Valley Heritage Corridor
E.1.h [DEC Spills or Remediation Site - Potential Contamination History]	Digital mapping data are not available or are incomplete. Refer to EAF Workbook.
E.1.h.i [DEC Spills or Remediation Site - Listed]	Digital mapping data are not available or are incomplete. Refer to EAF Workbook.
E.1.h.i [DEC Spills or Remediation Site - Environmental Site Remediation Database]	Digital mapping data are not available or are incomplete. Refer to EAF Workbook.
E.1.h.iii [Within 2,000' of DEC Remediation Site]	No
E.2.g [Unique Geologic Features]	No
E.2.h.i [Surface Water Features]	Yes - Digital mapping information on local, New York State, and federal wetlands and waterbodies is known to be incomplete. Refer to the EAF Workbook.
E.2.h.ii [Surface Water Features]	Yes - Digital mapping information on local, New York State, and federal wetlands and waterbodies is known to be incomplete. Refer to the EAF Workbook.
E.2.h.iii [Surface Water Features]	Yes - Digital mapping information on local, New York State, and federal wetlands and waterbodies is known to be incomplete. Refer to the EAF Workbook.
E.2.h.iv [Surface Water Features - Stream Name]	899-99
E.2.h.iv [Surface Water Features - Stream Classification]	D
E.2.h.iv [Surface Water Features - Wetlands Name]	Federal Waters

E.2.h.v [Impaired Water Bodies]	No
E.2.i. [Floodway]	No
E.2.j. [100 Year Floodplain]	No
E.2.k. [500 Year Floodplain]	No
E.2.l. [Aquifers]	Yes
E.2.l. [Aquifer Names]	Principal Aquifer
E.2.n. [Natural Communities]	No
E.2.o. [Endangered or Threatened Species]	No
E.2.p. [Rare Plants or Animals]	No
E.3.a. [Agricultural District]	Yes
E.3.a. [Agricultural District]	ONEI002
E.3.c. [National Natural Landmark]	No
E.3.d [Critical Environmental Area]	No
E.3.e. [National or State Register of Historic Places or State Eligible Sites]	Yes - Digital mapping data for archaeological site boundaries are not available. Refer to EAF Workbook.
E.3.e.ii [National or State Register of Historic Places or State Eligible Sites - Name]	The Beeches
E.3.f. [Archeological Sites]	Yes
E.3.i. [Designated River Corridor]	No

Agency Use Only [If applicable]

Project :

Date :

Full Environmental Assessment Form
Part 2 - Identification of Potential Project Impacts

Part 2 is to be completed by the lead agency. Part 2 is designed to help the lead agency inventory all potential resources that could be affected by a proposed project or action. We recognize that the lead agency's reviewer(s) will not necessarily be environmental professionals. So, the questions are designed to walk a reviewer through the assessment process by providing a series of questions that can be answered using the information found in Part 1. To further assist the lead agency in completing Part 2, the form identifies the most relevant questions in Part 1 that will provide the information needed to answer the Part 2 question. When Part 2 is completed, the lead agency will have identified the relevant environmental areas that may be impacted by the proposed activity.

If the lead agency is a state agency **and** the action is in any Coastal Area, complete the Coastal Assessment Form before proceeding with this assessment.

Tips for completing Part 2:

- Review all of the information provided in Part 1.
- Review any application, maps, supporting materials and the Full EAF Workbook.
- Answer each of the 18 questions in Part 2.
- If you answer "**Yes"** to a numbered question, please complete all the questions that follow in that section.
- If you answer "**No"** to a numbered question, move on to the next numbered question.
- Check appropriate column to indicate the anticipated size of the impact.
- Proposed projects that would exceed a numeric threshold contained in a question should result in the reviewing agency checking the box "Moderate to large impact may occur."
- The reviewer is not expected to be an expert in environmental analysis.
- If you are not sure or undecided about the size of an impact, it may help to review the sub-questions for the general question and consult the workbook.
- When answering a question consider all components of the proposed activity, that is, the "whole action".
- Consider the possibility for long-term and cumulative impacts as well as direct impacts.
- Answer the question in a reasonable manner considering the scale and context of the project.

1. Impact on Land

Proposed action may involve construction on, or physical alteration of, the land surface of the proposed site. (See Part 1. D.1) ☐ NO ☐ YES

If "Yes", answer questions a - j. If "No", move on to Section 2.

	Relevant Part I Question(s)	No, or small impact may occur	Moderate to large impact may occur
a. The proposed action may involve construction on land where depth to water table is less than 3 feet.	E2d	☐	☐
b. The proposed action may involve construction on slopes of 15% or greater.	E2f	☐	☐
c. The proposed action may involve construction on land where bedrock is exposed, or generally within 5 feet of existing ground surface.	E2a	☐	☐
d. The proposed action may involve the excavation and removal of more than 1,000 tons of natural material.	D2a	☐	☐
e. The proposed action may involve construction that continues for more than one year or in multiple phases.	D1e	☐	☐
f. The proposed action may result in increased erosion, whether from physical disturbance or vegetation removal (including from treatment by herbicides).	D2e, D2q	☐	☐
g. The proposed action is, or may be, located within a Coastal Erosion hazard area.	B1i	☐	☐
h. Other impacts: _____ _____		☐	☐

2. Impact on Geological Features

The proposed action may result in the modification or destruction of, or inhibit access to, any unique or unusual land forms on the site (e.g., cliffs, dunes, minerals, fossils, caves). (See Part 1. E.2.g) ☐ NO ☐ YES

If "Yes", answer questions a - c. If "No", move on to Section 3.

	Relevant Part I Question(s)	No, or small impact may occur	Moderate to large impact may occur
a. Identify the specific land form(s) attached: _____ _____	E2g	☐	☐
b. The proposed action may affect or is adjacent to a geological feature listed as a registered National Natural Landmark. Specific feature: _____	E3c	☐	☐
c. Other impacts: _____ _____		☐	☐

3. Impacts on Surface Water

The proposed action may affect one or more wetlands or other surface water bodies (e.g., streams, rivers, ponds or lakes). (See Part 1. D.2, E.2.h) ☐ NO ☐ YES

If "Yes", answer questions a - l. If "No", move on to Section 4.

	Relevant Part I Question(s)	No, or small impact may occur	Moderate to large impact may occur
a. The proposed action may create a new water body.	D2b, D1h	☐	☐
b. The proposed action may result in an increase or decrease of over 10% or more than a 10 acre increase or decrease in the surface area of any body of water.	D2b	☐	☐
c. The proposed action may involve dredging more than 100 cubic yards of material from a wetland or water body.	D2a	☐	☐
d. The proposed action may involve construction within or adjoining a freshwater or tidal wetland, or in the bed or banks of any other water body.	E2h	☐	☐
e. The proposed action may create turbidity in a waterbody, either from upland erosion, runoff or by disturbing bottom sediments.	D2a, D2h	☐	☐
f. The proposed action may include construction of one or more intake(s) for withdrawal of water from surface water.	D2c	☐	☐
g. The proposed action may include construction of one or more outfall(s) for discharge of wastewater to surface water(s).	D2d	☐	☐
h. The proposed action may cause soil erosion, or otherwise create a source of stormwater discharge that may lead to siltation or other degradation of receiving water bodies.	D2e	☐	☐
i. The proposed action may affect the water quality of any water bodies within or downstream of the site of the proposed action.	E2h	☐	☐
j. The proposed action may involve the application of pesticides or herbicides in or around any water body.	D2q, E2h	☐	☐
k. The proposed action may require the construction of new, or expansion of existing, wastewater treatment facilities.	D1a, D2d	☐	☐

l. Other impacts: _____ _____		☐	☐

4. Impact on groundwater

The proposed action may result in new or additional use of ground water, or may have the potential to introduce contaminants to ground water or an aquifer. (See Part 1. D.2.a, D.2.c, D.2.d, D.2.p, D.2.q, D.2.t) ☐ NO ☐ YES

If "Yes", answer questions a - h. If "No", move on to Section 5.

	Relevant Part I Question(s)	No, or small impact may occur	Moderate to large impact may occur
a. The proposed action may require new water supply wells, or create additional demand on supplies from existing water supply wells.	D2c	☐	☐
b. Water supply demand from the proposed action may exceed safe and sustainable withdrawal capacity rate of the local supply or aquifer. Cite Source: _____	D2c	☐	☐
c. The proposed action may allow or result in residential uses in areas without water and sewer services.	D1a, D2c	☐	☐
d. The proposed action may include or require wastewater discharged to groundwater.	D2d, E2l	☐	☐
e. The proposed action may result in the construction of water supply wells in locations where groundwater is, or is suspected to be, contaminated.	D2c, E1f, E1g, E1h	☐	☐
f. The proposed action may require the bulk storage of petroleum or chemical products over ground water or an aquifer.	D2p, E2l	☐	☐
g. The proposed action may involve the commercial application of pesticides within 100 feet of potable drinking water or irrigation sources.	E2h, D2q, E2l, D2c	☐	☐
h. Other impacts: _____ _____		☐	☐

5. Impact on Flooding

The proposed action may result in development on lands subject to flooding. (See Part 1. E.2) ☐ NO ☐ YES

If "Yes", answer questions a - g. If "No", move on to Section 6.

	Relevant Part I Question(s)	No, or small impact may occur	Moderate to large impact may occur
a. The proposed action may result in development in a designated floodway.	E2i	☐	☐
b. The proposed action may result in development within a 100 year floodplain.	E2j	☐	☐
c. The proposed action may result in development within a 500 year floodplain.	E2k	☐	☐
d. The proposed action may result in, or require, modification of existing drainage patterns.	D2b, D2e	☐	☐
e. The proposed action may change flood water flows that contribute to flooding.	D2b, E2i, E2j, E2k	☐	☐
f. If there is a dam located on the site of the proposed action, is the dam in need of repair, or upgrade?	E1e	☐	☐

g. Other impacts: _____ _____		☐	☐

6. Impacts on Air

The proposed action may include a state regulated air emission source. ☐NO ☐YES
(See Part 1. D.2.f., D.2.h, D.2.g)
If "Yes", answer questions a - f. If "No", move on to Section 7.

	Relevant Part I Question(s)	No, or small impact may occur	Moderate to large impact may occur
a. If the proposed action requires federal or state air emission permits, the action may also emit one or more greenhouse gases at or above the following levels:			
i. More than 1000 tons/year of carbon dioxide (CO_2)	D2g	☐	☐
ii. More than 3.5 tons/year of nitrous oxide (N_2O)	D2g	☐	☐
iii. More than 1000 tons/year of carbon equivalent of perfluorocarbons (PFCs)	D2g	☐	☐
iv. More than .045 tons/year of sulfur hexafluoride (SF_6)	D2g	☐	☐
v. More than 1000 tons/year of carbon dioxide equivalent of hydrochloroflourocarbons (HFCs) emissions	D2g	☐	☐
vi. 43 tons/year or more of methane	D2h	☐	☐
b. The proposed action may generate 10 tons/year or more of any one designated hazardous air pollutant, or 25 tons/year or more of any combination of such hazardous air pollutants.	D2g	☐	☐
c. The proposed action may require a state air registration, or may produce an emissions rate of total contaminants that may exceed 5 lbs. per hour, or may include a heat source capable of producing more than 10 million BTU's per hour.	D2f, D2g	☐	☐
d. The proposed action may reach 50% of any of the thresholds in "a" through "c", above.	D2g	☐	☐
e. The proposed action may result in the combustion or thermal treatment of more than 1 ton of refuse per hour.	D2s	☐	☐
f. Other impacts: _____ _____		☐	☐

7. Impact on Plants and Animals

The proposed action may result in a loss of flora or fauna. (See Part 1. E.2. m.-q.) ☐NO ☐YES
If "Yes", answer questions a - j. If "No", move on to Section 8.

	Relevant Part I Question(s)	No, or small impact may occur	Moderate to large impact may occur
a. The proposed action may cause reduction in population or loss of individuals of any threatened or endangered species, as listed by New York State or the Federal government, that use the site, or are found on, over, or near the site.	E2o	☐	☐
b. The proposed action may result in a reduction or degradation of any habitat used by any rare, threatened or endangered species, as listed by New York State or the federal government.	E2o	☐	☐
c. The proposed action may cause reduction in population, or loss of individuals, of any species of special concern or conservation need, as listed by New York State or the Federal government, that use the site, or are found on, over, or near the site.	E2p	☐	☐
d. The proposed action may result in a reduction or degradation of any habitat used by any species of special concern and conservation need, as listed by New York State or the Federal government.	E2p	☐	☐

e. The proposed action may diminish the capacity of a registered National Natural Landmark to support the biological community it was established to protect.	E3c	☐	☐
f. The proposed action may result in the removal of, or ground disturbance in, any portion of a designated significant natural community. Source: _____	E2n	☐	☐
g. The proposed action may substantially interfere with nesting/breeding, foraging, or over-wintering habitat for the predominant species that occupy or use the project site.	E2m	☐	☐
h. The proposed action requires the conversion of more than 10 acres of forest, grassland or any other regionally or locally important habitat. Habitat type & information source: _____ _____	E1b	☐	☐
i. Proposed action (commercial, industrial or recreational projects, only) involves use of herbicides or pesticides.	D2q	☐	☐
j. Other impacts: _____ _____		☐	☐

8. Impact on Agricultural Resources

The proposed action may impact agricultural resources. (See Part 1. E.3.a. and b.) ☐ NO ☐ YES

If "Yes", answer questions a - h. If "No", move on to Section 9.

	Relevant Part I Question(s)	**No, or small impact may occur**	**Moderate to large impact may occur**
a. The proposed action may impact soil classified within soil group 1 through 4 of the NYS Land Classification System.	E2c, E3b	☐	☐
b. The proposed action may sever, cross or otherwise limit access to agricultural land (includes cropland, hayfields, pasture, vineyard, orchard, etc).	E1a, Elb	☐	☐
c. The proposed action may result in the excavation or compaction of the soil profile of active agricultural land.	E3b	☐	☐
d. The proposed action may irreversibly convert agricultural land to non-agricultural uses, either more than 2.5 acres if located in an Agricultural District, or more than 10 acres if not within an Agricultural District.	E1b, E3a	☐	☐
e. The proposed action may disrupt or prevent installation of an agricultural land management system.	El a, E1b	☐	☐
f. The proposed action may result, directly or indirectly, in increased development potential or pressure on farmland.	C2c, C3, D2c, D2d	☐	☐
g. The proposed project is not consistent with the adopted municipal Farmland Protection Plan.	C2c	☐	☐
h. Other impacts: _____		☐	☐

9. Impact on Aesthetic Resources

The land use of the proposed action are obviously different from, or are in sharp contrast to, current land use patterns between the proposed project and a scenic or aesthetic resource. (Part 1. E.1.a, E.1.b, E.3.h.) ☐ NO ☐ YES

If "Yes", answer questions a - g. If "No", go to Section 10.

	Relevant Part I Question(s)	No, or small impact may occur	Moderate to large impact may occur
a. Proposed action may be visible from any officially designated federal, state, or local scenic or aesthetic resource.	E3h	☐	☐
b. The proposed action may result in the obstruction, elimination or significant screening of one or more officially designated scenic views.	E3h, C2b	☐	☐
c. The proposed action may be visible from publicly accessible vantage points: i. Seasonally (e.g., screened by summer foliage, but visible during other seasons) ii. Year round	E3h	☐ ☐	☐ ☐
d. The situation or activity in which viewers are engaged while viewing the proposed action is: i. Routine travel by residents, including travel to and from work ii. Recreational or tourism based activities	E3h E2q, E1c	☐ ☐	☐ ☐
e. The proposed action may cause a diminishment of the public enjoyment and appreciation of the designated aesthetic resource.	E3h	☐	☐
f. There are similar projects visible within the following distance of the proposed project: 0-1/2 mile ½ -3 mile 3-5 mile 5+ mile	D1a, E1a, D1f, D1g	☐	☐
g. Other impacts: _____ _____		☐	☐

10. Impact on Historic and Archeological Resources

The proposed action may occur in or adjacent to a historic or archaeological resource. (Part 1. E.3.e, f. and g.) ☐ NO ☐ YES

If "Yes", answer questions a - e. If "No", go to Section 11.

	Relevant Part I Question(s)	No, or small impact may occur	Moderate to large impact may occur
a. The proposed action may occur wholly or partially within, or substantially contiguous to, any buildings, archaeological site or district which is listed on the National or State Register of Historical Places, or that has been determined by the Commissioner of the NYS Office of Parks, Recreation and Historic Preservation to be eligible for listing on the State Register of Historic Places.	E3e	☐	☐
b. The proposed action may occur wholly or partially within, or substantially contiguous to, an area designated as sensitive for archaeological sites on the NY State Historic Preservation Office (SHPO) archaeological site inventory.	E3f	☐	☐
c. The proposed action may occur wholly or partially within, or substantially contiguous to, an archaeological site not included on the NY SHPO inventory. Source: _____	E3g	☐	☐

d. Other impacts: _____ _____		☐	☐
e. If any of the above (a-d) are answered "Moderate to large impact may occur", continue with the following questions to help support conclusions in Part 3:			
i. The proposed action may result in the destruction or alteration of all or part of the site or property.	E3e, E3g, E3f	☐	☐
ii. The proposed action may result in the alteration of the property's setting or integrity.	E3e, E3f, E3g, E1a, E1b	☐	☐
iii. The proposed action may result in the introduction of visual elements which are out of character with the site or property, or may alter its setting.	E3e, E3f, E3g, E3h, C2, C3	☐	☐

11. Impact on Open Space and Recreation

The proposed action may result in a loss of recreational opportunities or a reduction of an open space resource as designated in any adopted municipal open space plan.
(See Part 1. C.2.c, E.1.c., E.2.q.)
If "Yes", answer questions a - e. If "No", go to Section 12.

☐ NO ☐ YES

	Relevant Part I Question(s)	No, or small impact may occur	Moderate to large impact may occur
a. The proposed action may result in an impairment of natural functions, or "ecosystem services", provided by an undeveloped area, including but not limited to stormwater storage, nutrient cycling, wildlife habitat.	D2e, E1b E2h, E2m, E2o, E2n, E2p	☐	☐
b. The proposed action may result in the loss of a current or future recreational resource.	C2a, E1c, C2c, E2q	☐	☐
c. The proposed action may eliminate open space or recreational resource in an area with few such resources.	C2a, C2c E1c, E2q	☐	☐
d. The proposed action may result in loss of an area now used informally by the community as an open space resource.	C2c, E1c	☐	☐
e. Other impacts: _____ _____		☐	☐

12. Impact on Critical Environmental Areas

The proposed action may be located within or adjacent to a critical environmental area (CEA). (See Part 1. E.3.d)
If "Yes", answer questions a - c. If "No", go to Section 13.

☐ NO ☐ YES

	Relevant Part I Question(s)	No, or small impact may occur	Moderate to large impact may occur
a. The proposed action may result in a reduction in the quantity of the resource or characteristic which was the basis for designation of the CEA.	E3d	☐	☐
b. The proposed action may result in a reduction in the quality of the resource or characteristic which was the basis for designation of the CEA.	E3d	☐	☐
c. Other impacts: _____ _____		☐	☐

13. Impact on Transportation

The proposed action may result in a change to existing transportation systems. ☐ NO ☐ YES
(See Part 1. D.2.j)
If "Yes", answer questions a - f. If "No", go to Section 14.

	Relevant Part I Question(s)	No, or small impact may occur	Moderate to large impact may occur
a. Projected traffic increase may exceed capacity of existing road network.	D2j	☐	☐
b. The proposed action may result in the construction of paved parking area for 500 or more vehicles.	D2j	☐	☐
c. The proposed action will degrade existing transit access.	D2j	☐	☐
d. The proposed action will degrade existing pedestrian or bicycle accommodations.	D2j	☐	☐
e. The proposed action may alter the present pattern of movement of people or goods.	D2j	☐	☐
f. Other impacts: _____ _____		☐	☐

14. Impact on Energy

The proposed action may cause an increase in the use of any form of energy. ☐ NO ☐ YES
(See Part 1. D.2.k)
If "Yes", answer questions a - e. If "No", go to Section 15.

	Relevant Part I Question(s)	No, or small impact may occur	Moderate to large impact may occur
a. The proposed action will require a new, or an upgrade to an existing, substation.	D2k	☐	☐
b. The proposed action will require the creation or extension of an energy transmission or supply system to serve more than 50 single or two-family residences or to serve a commercial or industrial use.	D1f, D1q, D2k	☐	☐
c. The proposed action may utilize more than 2,500 MWhrs per year of electricity.	D2k	☐	☐
d. The proposed action may involve heating and/or cooling of more than 100,000 square feet of building area when completed.	D1g	☐	☐
e. Other Impacts: _____ _____		☐	☐

15. Impact on Noise, Odor, and Light

The proposed action may result in an increase in noise, odors, or outdoor lighting. ☐ NO ☐ YES
(See Part 1. D.2.m., n., and o.)
If "Yes", answer questions a - f. If "No", go to Section 16.

	Relevant Part I Question(s)	No, or small impact may occur	Moderate to large impact may occur
a. The proposed action may produce sound above noise levels established by local regulation.	D2m	☐	☐
b. The proposed action may result in blasting within 1,500 feet of any residence, hospital, school, licensed day care center, or nursing home.	D2m, E1d	☐	☐
c. The proposed action may result in routine odors for more than one hour per day.	D2o	☐	☐

d. The proposed action may result in light shining onto adjoining properties.	D2n	☐	☐
e. The proposed action may result in lighting creating sky-glow brighter than existing area conditions.	D2n, E1a	☐	☐
f. Other impacts: _____ _____		☐	☐

16. Impact on Human Health

The proposed action may have an impact on human health from exposure to new or existing sources of contaminants. (See Part 1.D.2.q., E.1. d. f. g. and h.) ☐ NO ☐ YES

If "Yes", answer questions a - m. If "No", go to Section 17.

	Relevant Part I Question(s)	No,or small impact may cccur	Moderate to large impact may occur
a. The proposed action is located within 1500 feet of a school, hospital, licensed day care center, group home, nursing home or retirement community.	E1d	☐	☐
b. The site of the proposed action is currently undergoing remediation.	E1g, E1h	☐	☐
c. There is a completed emergency spill remediation, or a completed environmental site remediation on, or adjacent to, the site of the proposed action.	E1g, E1h	☐	☐
d. The site of the action is subject to an institutional control limiting the use of the property (e.g., easement or deed restriction).	E1g, E1h	☐	☐
e. The proposed action may affect institutional control measures that were put in place to ensure that the site remains protective of the environment and human health.	E1g, E1h	☐	☐
f. The proposed action has adequate control measures in place to ensure that future generation, treatment and/or disposal of hazardous wastes will be protective of the environment and human health.	D2t	☐	☐
g. The proposed action involves construction or modification of a solid waste management facility.	D2q, E1f	☐	☐
h. The proposed action may result in the unearthing of solid or hazardous waste.	D2q, E1f	☐	☐
i. The proposed action may result in an increase in the rate of disposal, or processing, of solid waste.	D2r, D2s	☐	☐
j. The proposed action may result in excavation or other disturbance within 2000 feet of a site used for the disposal of solid or hazardous waste.	E1f, E1g E1h	☐	☐
k. The proposed action may result in the migration of explosive gases from a landfill site to adjacent off site structures.	E1f, E1g	☐	☐
l. The proposed action may result in the release of contaminated leachate from the project site.	D2s, E1f, D2r	☐	☐
m. Other impacts: _____ _____		☐	☐

17. Consistency with Community Plans

The proposed action is not consistent with adopted land use plans. ☐ NO ☐ YES
(See Part 1. C.1, C.2. and C.3.)
If "Yes", answer questions a - h. If "No", go to Section 18.

	Relevant Part I Question(s)	No, or small impact may occur	Moderate to large impact may occur
a. The proposed action's land use components may be different from, or in sharp contrast to, current surrounding land use pattern(s).	C2, C3, D1a E1a, E1b	☐	☐
b. The proposed action will cause the permanent population of the city, town or village in which the project is located to grow by more than 5%.	C2	☐	☐
c. The proposed action is inconsistent with local land use plans or zoning regulations.	C2, C2, C3	☐	☐
d. The proposed action is inconsistent with any County plans, or other regional land use plans.	C2, C2	☐	☐
e. The proposed action may cause a change in the density of development that is not supported by existing infrastructure or is distant from existing infrastructure.	C3, D1c, D1d, D1f, D1d, Elb	☐	☐
f. The proposed action is located in an area characterized by low density development that will require new or expanded public infrastructure.	C4, D2c, D2d D2j	☐	☐
g. The proposed action may induce secondary development impacts (e.g., residential or commercial development not included in the proposed action)	C2a	☐	☐
h. Other: _____ _____		☐	☐

18. Consistency with Community Character

The proposed project is inconsistent with the existing community character. ☐ NO ☐ YES
(See Part 1. C.2, C.3, D.2, E.3)
If "Yes", answer questions a - g. If "No", proceed to Part 3.

	Relevant Part I Question(s)	No, or small impact may occur	Moderate to large impact may occur
a. The proposed action may replace or eliminate existing facilities, structures, or areas of historic importance to the community.	E3e, E3f, E3g	☐	☐
b. The proposed action may create a demand for additional community services (e.g. schools, police and fire)	C4	☐	☐
c. The proposed action may displace affordable or low-income housing in an area where there is a shortage of such housing.	C2, C3, D1f D1g, E1a	☐	☐
d. The proposed action may interfere with the use or enjoyment of officially recognized or designated public resources.	C2, E3	☐	☐
e. The proposed action is inconsistent with the predominant architectural scale and character.	C2, C3	☐	☐
f. Proposed action is inconsistent with the character of the existing natural landscape.	C2, C3 E1a, E1b E2g, E2h	☐	☐
g. Other impacts: _____ _____		☐	☐

PRINT FULL FORM

Agency Use Only [IfApplicable]

Project :

Date :

Full Environmental Assessment Form
Part 3 - Evaluation of the Magnitude and Importance of Project Impacts
and
Determination of Significance

Part 3 provides the reasons in support of the determination of significance. The lead agency must complete Part 3 for every question in Part 2 where the impact has been identified as potentially moderate to large or where there is a need to explain why a particular element of the proposed action will not, or may, result in a significant adverse environmental impact.

Based on the analysis in Part 3, the lead agency must decide whether to require an environmental impact statement to further assess the proposed action or whether available information is sufficient for the lead agency to conclude that the proposed action will not have a significant adverse environmental impact. By completing the certification on the next page, the lead agency can complete its determination of significance.

Reasons Supporting This Determination:

To complete this section:

- Identify the impact based on the Part 2 responses and describe its magnitude. Magnitude considers factors such as severity, size or extent of an impact.
- Assess the importance of the impact. Importance relates to the geographic scope, duration, probability of the impact occurring, number of people affected by the impact and any additional environmental consequences if the impact were to occur.
- The assessment should take into consideration any design element or project changes.
- Repeat this process for each Part 2 question where the impact has been identified as potentially moderate to large or where there is a need to explain why a particular element of the proposed action will not, or may, result in a significant adverse environmental impact.
- Provide the reason(s) why the impact may, or will not, result in a significant adverse environmental impact
- For Conditional Negative Declarations identify the specific condition(s) imposed that will modify the proposed action so that no significant adverse environmental impacts will result.
- Attach additional sheets, as needed.

Determination of Significance - Type 1 and Unlisted Actions

SEQR Status: ☐ Type 1 ☐ Unlisted

Identify portions of EAF completed for this Project: ☐ Part 1 ☐ Part 2 ☐ Part 3

Upon review of the information recorded on this EAF, as noted, plus this additional support information

_____

_____

_____

and considering both the magnitude and importance of each identified potential impact, it is the conclusion of the _____ as lead agency that:

☐ A. This project will result in no significant adverse impacts on the environment, and, therefore, an environmental impact statement need not be prepared. Accordingly, this negative declaration is issued.

☐ B. Although this project could have a significant adverse impact on the environment, that impact will be avoided or substantially mitigated because of the following conditions which will be required by the lead agency:

_____

_____

_____

_____

There will, therefore, be no significant adverse impacts from the project as conditioned, and, therefore, this conditioned negative declaration is issued. A conditioned negative declaration may be used only for UNLISTED actions (see 6 NYCRR 617.7(d)).

☐ C. This Project may result in one or more significant adverse impacts on the environment, and an environmental impact statement must be prepared to further assess the impact(s) and possible mitigation and to explore alternatives to avoid or reduce those impacts. Accordingly, this positive declaration is issued.

Name of Action:	
Name of Lead Agency:	
Name of Responsible Officer in Lead Agency:	
Title of Responsible Officer:	
Signature of Responsible Officer in Lead Agency:	Date:
Signature of Preparer (if different from Responsible Officer)	Date:

For Further Information:

Contact Person:

Address:

Telephone Number:

E-mail:

For Type 1 Actions and Conditioned Negative Declarations, a copy of this Notice is sent to:

Chief Executive Officer of the political subdivision in which the action will be principally located (e.g., Town / City / Village of)
Other involved agencies (if any)
Applicant (if any)
Environmental Notice Bulletin: http://www.dec.ny.gov/enb/enb.html

PRINT FULL FORM

Appendix C

Preliminary Plat

Appendix D

Site Development Plan Package

SAVED: 9/15/26 3:50 PM

CONTRACT DRAWINGS

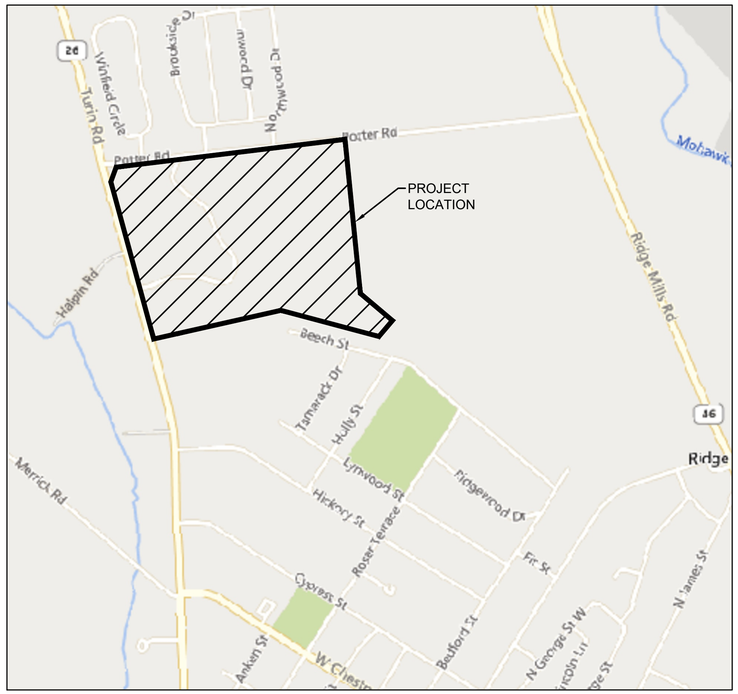

LOCATION PLAN
NOT TO SCALE

NASCENTIA NEIGHBORHOOD SUBDIVISION

INDEX TO DRAWINGS

	COVER SHEET
C-001	GENERAL NOTES
C-100	EXISTING SITE DEMOLITION PLAN
C-101	OVERALL SITE PLAN
C-102	ENLARGED SITE PLAN
C-103	ENLARGED SITE PLAN
C-104	ENLARGED SITE PLAN
C-105	ENLARGED SITE PLAN
C-106	ENLARGED SITE GRADING & ESC PLAN
C-107	ENLARGED SITE GRADING & ESC PLAN
C-108	ENLARGED SITE GRADING & ESC PLAN
C-109	ENLARGED SITE GRADING & ESC PLAN
C-110	ENLARGED SITE UTILITY PLAN
C-111	ENLARGED SITE UTILITY PLAN
C-112	ENLARGED SITE UTILITY PLAN
C-113	ENLARGED SITE UTILITY PLAN
C-201	CENTERLINE ROAD PROFILES – ROAD A
C-202	CENTERLINE ROAD PROFILE – ROAD B
C-203	SANITARY SEWER PROFILES
C-204	SANITARY SEWER PROFILES
C-205	WATER MAIN PROFILES
C-206	WATER MAIN PROFILES
C-501	ESC DETAILS
C-502	MISCELLANEOUS DETAILS
C-503	WATER DETAILS
C-504	STORMWATER DETAILS

7900 TURIN ROAD
CITY OF ROME
ONEIDA COUNTY

SEPTEMBER 15, 2026

MBL ENGINEERING, PLLC

MBL ENGINEERING, PLLC
16510 BALCH PLACE
MANNSVILLE, NY 13661



SAVED: 9/15/26 3:53 PM

SITE NOTES:

1. THE CONTRACTOR AND ALL SUBCONTRACTORS SHALL NOTIFY DIG SAFELY NEW YORK (1.800.962.7962 OR 811) PRIOR TO THE COMMENCEMENT OF CONSTRUCTION, INCLUDING ANY EXCAVATION AND TEST BORINGS ACCORDING TO CODE RULE 753. THE CONTRACTOR SHALL CONTACT DIG SAFELY NEW YORK AND THE OWNER PRIOR TO INITIATION OF CONSTRUCTION ACTIVITIES AND SHALL PROVIDE AT LEAST 72 HOURS NOTIFICATION.
2. THE CONTRACTOR SHALL COORDINATE ALL WORK AFFECTING UTILITIES WITH THE RESPECTIVE UTILITY OWNER INCLUDING THE CITY OF ROME FOR THE SANITARY AND WATER CONNECTIONS. ALL DETAILS OF CONSTRUCTION AND/OR RELOCATION OF AFFECTED UTILITIES SHALL BE APPROVED BY THE UTILITY OWNER, THE OWNER AND OTHER APPROVING AGENCIES.
3. ALL GRADED OR DISTURBED AREAS INCLUDING SLOPES SHALL BE PROTECTED DURING CLEARING AND CONSTRUCTION IN ACCORDANCE WITH THE EROSION & SEDIMENT CONTROL PLAN, AND STORMWATER POLLUTION PREVENTION PLAN.

SURVEY NOTES

1. TOPOGRAPHIC & PLANIMETRIC INFORMATION SHOWN HEREIN PLOTTED FROM FIELD SURVEY PERFORMED BY LEHR LAND SURVEYORS D.P.C, DATED MARCH 26, 2021.
2. SUBJECT TO ANY AND ALL EASEMENTS OF RECORD AND/OR AS FOUND IN THE FIELD.
3. VERTICAL DATUM BASED ON NAVD1988. HORIZONTAL DATUM BASED ON NAD83, NEW YORK STATE PLANE COORDINATES, CENTRAL ZONE.

NEW YORK STATE D.O.T. SPECIFICATIONS:

1. CONTRACTOR SHALL FOLLOW REQUIREMENTS OF 608-01 STANDARD SHEETS
2. EXCEPT AS MODIFIED HEREIN, SECTIONS 200 THROUGH 700 OF THE LATEST EDITION OF THE STANDARD SPECIFICATIONS, CONSTRUCTION AND MATERIALS ISSUED BY THE NEW YORK STATE DEPARTMENT OF TRANSPORTATION, OFFICE OF ENGINEERING, INCLUDING ALL REVISIONS AND ADDENDA ISSUED BY NYSDOT PRIOR TO THE DATE THE NOTICE TO BIDDERS IS ADVERTISED, HEREINAFTER REFERRED TO AS THE NYSDOT STANDARD SPECIFICATIONS, SHALL GOVERN THE WORK TO BE DONE WHERE REFERRED TO ON THE PLANS AND IN THE SPECIFICATIONS. IF A CONFLICT EXISTS BETWEEN THE NYSDOT STANDARD SPECIFICATIONS AND THESE CONTRACT DOCUMENTS, THE CONTRACT DOCUMENTS SHALL GOVERN.
3. ANY REFERENCE TO NYSDOT STANDARD SPECIFICATIONS IS LIMITED IN SCOPE TO TECHNICAL ENGINEERING AND CONSTRUCTION WORK; MATERIALS, DETAILS, PROCEDURES, ETC. ALL REFERENCES TO THE STATE OR THE NYSDOT OR ADMINISTRATIVE OFFICERS OR EMPLOYEES THEREOF ARE NULL AND VOID WITH RESPECT TO LEGAL OR CONTRACTUAL RESPONSIBILITIES.
4. FOR CLARIFICATION, WHERE THE STATE OF NEW YORK OR THE NYSDOT OR ADMINISTRATIVE OFFICERS OR EMPLOYEES THEREOF ARE NAMED IN THE STANDARD SPECIFICATIONS, SUCH REFERENCES SHALL BE TAKEN TO MEAN EITHER THE ENGINEER OR OWNER AS DEFINED BY THE CONTRACT, EACH WITH SEPARATE AND DISTINCT RESPONSIBILITIES DESCRIBED OR REASONABLY IMPLIED BY THE CONTRACT.
5. THE CONTRACTOR IS ADVISED THAT THE METHOD OF MEASUREMENT AND BASIS OF PAYMENT FOR INDIVIDUAL NYSDOT ITEM NUMBERS DOES NOT NECESSARILY REFLECT THE OWNER'S METHOD OF MEASUREMENTS AND/OR BASIS OF PAYMENT.

GENERAL UTILITY:

1. THE APPROXIMATE LOCATION OF ALL KNOWN EXISTING UNDERGROUND UTILITIES ARE SHOWN ON THE PLANS. THE CONTRACTOR SHALL VERIFY THE TRUE LOCATION AND DEPTH PRIOR TO COMMENCING WORK. BEFORE ANY PIPE IS INSTALLED, THE CONTRACTOR SHALL UNCOVER ALL EXISTING UTILITIES AT PROPOSED PIPE CROSSINGS TO ENABLE THE OWNER'S REPRESENTATIVE TO VERIFY NO CONFLICTS OF UTILITY LOCATIONS SHALL OCCUR. IN THE EVENT A CONFLICT OR POTENTIAL CONFLICT IS IDENTIFIED, THE CONTRACTOR SHALL NOTIFY THE OWNER'S REPRESENTATIVE IMMEDIATELY.
2. THE CONTRACTOR SHALL VERIFY LOCATION, SIZE AND JOINT TYPE OF EXISTING PIPES AT CONNECTION LOCATIONS PRIOR TO CONSTRUCTION, TO ENABLE AN APPROVED COMPATIBLE CONNECTION.

DRAINAGE:

1. STORM SEWER PIPE SHALL BE SMOOTH INTERIOR CORRUGATED POLYETHYLENE DRAINAGE PIPE WITH MANNINGS "N" OF 0.012 OR LESS (ADS N-12 OR APPROVED EQUAL).
2. ALL STRUCTURES AND APPURTENANCES SHALL BE DESIGNED FOR H25 LOADINGS.
3. FRAMES AND GRATES SHALL BE AS NOTED ON RESPECTIVE DETAILS.
4. ALL EXISTING DRAINAGE FACILITIES TO REMAIN SHALL BE MAINTAINED FREE OF DEBRIS AND FOREIGN MATTER AND OPERATIONAL THROUGHOUT THE DURATION OF THE CONTRACT.
5. ALL PROPOSED CATCH BASINS AND MANHOLE RIMS TO BE ADJUSTED TO FINISHED GRADE ELEVATION, AS REQUIRED.

SANITARY SEWER:

1. CONTRACTOR SHALL NOT DIRECT SURFACE OR SUBSURFACE WATER TO THE SANITARY SEWER SYSTEM WITHOUT WRITTEN PERMISSION AND IN COMPLIANCE WITH THE REQUIREMENTS OF THE CITY OF ROME. THE CONTRACTOR SHALL BE RESPONSIBLE FOR ALL COSTS ASSOCIATED WITH DISPOSAL OF WATER.
2. ALL STRUCTURES AND APPURTENANCES SHALL BE DESIGNED FOR H25 LOADINGS EXCEPT WITHIN YARDS.
3. ALL SANITARY SEWER PIPE SHALL BE SDR-35.
4. LETTERING ON MANHOLE COVERS TO READ "SANITARY SEWER". MANHOLE RIMS ARE TO BE ADJUSTED TO MEET FINISHED GRADE ELEVATION.

WATERMAIN:

1. WATER SERVICE SHALL BE AS NOTED IN SCHEDULE.

PIPE SCHEDULE	
WATER	CLASS 52 DI
SANITARY	SDR-35
STORM	SICPP ADS N-12 WT

GRADING:

1. ALL GRADED OR DISTURBED AREAS INCLUDING SLOPES SHALL BE PROTECTED DURING CLEARING AND CONSTRUCTION IN ACCORDANCE WITH THE EROSION AND SEDIMENT CONTROL PLAN UNTIL THEY ARE ADEQUATELY STABILIZED. NO TREES CAN BE CLEARED DURING THE INDIANA BAT SEASON 6" CALIBER OR LARGER
2. AREAS SCHEDULED FOR EMBANKMENT SHALL BE CLEARED, GRUBBED AND STRIPPED OF TOPSOIL TO REMOVE TREES, VEGETATION, ROOTS OR OTHER OBJECTIONABLE MATERIAL.
3. ALL EMBANKMENTS SHALL BE COMPACTED AS SPECIFIED TO REDUCE EROSION, SLIPPAGE, SETTLEMENT, SUBSIDENCE OR OTHER RELATED PROBLEMS.
4. ALL EMBANKMENT MATERIALS SHALL BE PLACED AND COMPACTED IN LAYERS NOT TO EXCEED 8 INCHES IN THICKNESS.
5. FROZEN MATERIAL OR SOFT, MUCKY OR HIGHLY COMPRESSIBLE MATERIALS SHALL NOT BE INCORPORATED INTO EMBANKMENT SLOPES OF STRUCTURAL FILLS.
6. ALL DISTURBED AREAS WILL BE RESTORED IN ACCORDANCE WITH THE SOIL RESTORATION REQUIREMENTS IN TABLE 5.3 OF THE STORMWATER DESIGN MANUAL.

STABILIZATION WITH MULCH:

1. PROTECTIVE MATERIALS:
   A. UNROTTED SMALL-GRAIN STRAW OR SALT HAY SHALL BE SPREAD UNIFORMLY AT 90 TO 115 POUNDS PER 1,000 SQUARE FEET AND ANCHORED WITH A MULCH ANCHORING TOOL, LIQUID MULCH BINDERS OR NETTING TIEDOWN.
   B. SYNTHETIC OR ORGANIC SOIL STABILIZERS MAY BE USED, UNDER SUITABLE CONDITIONS AND IN SUFFICIENT QUANTITIES.
   C. WOOD-FIBER OR PAPER-FIBER MULCH AT THE RATE OF 1,500 POUNDS PER ACRE MAY BE APPLIED BY A HYDROSEEDER OR HYDROMULCHER.
   D. MULCH NETTING, SUCH AS PAPER JUTE, EXCELSIOR, COTTON OR PLASTIC MAY BE USED.
   E. EXCELSIOR MATTING SHALL BE USED ON SLOPES OF 1:4 OR STEEPER.
2. MULCH ANCHORING:
   A. PEG AND TWINE – DRIVE 8 TO 10 INCH WOODEN PEGS TO WITHIN 2 TO 3 INCHES OF THE SOIL SURFACE EVERY 4 FEET IN ALL DIRECTIONS. STAKES MAY BE DRIVEN BEFORE AND AFTER APPLYING MULCH. SECURE MULCH TO SOIL SURFACE BY STRETCHING TWINE BETWEEN PEGS IN A CRISS-CROSS AND A SQUARE PATTERN. SECURE TWINE AROUND EACH PEG WITH TWO OR MORE ROUND TURNS.
   B. MULCH NETTINGS – STAPLE PAPER, COTTON OR PLASTIC NETTINGS OVER HAY OR STRAW MULCH. USE A DEGRADABLE NETTING IN AREAS TO BE MOWED. NETTING IS USUALLY AVAILABLE IN ROLLS 4 FEET WIDE AND UP TO 300 FEET LONG.

NO.	DATE	
A	3/12/26	ISSUED FOR REGULATORY REVIEW
		DRAWING RELEASE

GENERAL NOTES

MBL ENGINEERING, PLLC

NASCENTIA HEALTH INC.
7900 TURIN ROAD
CITY OF ROME
ONEIDA COUNTY

PROJECT #
22-067

DATE:
MAY 2024

SHEET #
C-001

THIS DRAWING WAS PREPARED AT THE SCALE INDICATED IN THE TITLE BLOCK. INACCURACIES IN THE STATED SCALE MAY BE INTRODUCED WHEN DRAWINGS ARE REPRODUCED BY ANY MEANS. USE THE GRAPHIC SCALE BAR IN THE TITLE BLOCK TO DETERMINE THE ACTUAL SCALE OF THIS DRAWING.

IT IS A VIOLATION OF LAW FOR ANY PERSON, UNLESS ACTING UNDER THE DIRECTION OF A LICENSED ENGINEER, TO ALTER THIS DOCUMENT.

STATE OF NEW YORK
MICHAEL BYRON LEWIS
087148
LICENSED PROFESSIONAL ENGINEER

SAVED: 9/15/26 3:53 PM

POTTER ROAD

POTTER ROAD

STABILIZED CONSTRUCTION ENTRANCE

EXISTING BUILDING TO BE REMOVED

EXISTING FENCE TO BE REMOVED (TYP.)

PROPOSED CONSTRUCTION ACCESS

EXISTING FENCE TO BE REMOVED (TYP.)

EXISTING TREE TO REMAIN AND BE PROTECTED

UTILITY POLE WITH LIGHT

EXISTING UTILITY POLE TO REMAIN

EXISTING OVERHEAD ELECTRIC TO BE REMOVED (TYP.)

EXISTING LIGHT POLE TO BE REMOVED (TYP.)

EXISTING ASPHALT TO BE REMOVED (TYP.)

EXISTING BUILDING TO BE REMOVED

EXISTING TREE TO BE REMOVED (TYP.)

EXISTING UTILITY POLE TO BE RELOCATED

EXISTING BUILDING TO BE REMOVED

EXISTING SIDEWALK TO BE REMOVED (TYP.)

EXISTING SIDEWALK TO BE REMOVED (TYP.)

EXISTING BUILDING TO BE REMOVED

PLAN
SCALE: 1"=40'

1"=40' 40 0 40 80

THIS DRAWING WAS PREPARED AT THE SCALE INDICATED IN THE TITLE BLOCK. INACCURACIES IN THE STATED SCALE MAY BE INTRODUCED WHEN DRAWINGS ARE REPRODUCED BY ANY MEANS. USE THE GRAPHIC SCALE BAR IN THE TITLE BLOCK TO DETERMINE THE ACTUAL SCALE OF THIS DRAWING.

IT IS A VIOLATION OF LAW FOR ANY PERSON, UNLESS ACTING UNDER THE DIRECTION OF A LICENSED ENGINEER, TO ALTER THIS DOCUMENT.

STATE OF NEW YORK
MICHAEL BYRON LANG
098148
LICENSED PROFESSIONAL ENGINEER

NO.	DATE	
A	3/12/26	ISSUED FOR REGULATORY REVIEW
		DRAWING RELEASE

EXISTING SITE DEMOLITION PLAN

MBL ENGINEERING, PLLC

NASCENTIA HEALTH INC.
7900 TURIN ROAD
CITY OF ROME
ONEIDA COUNTY

PROJECT # 22-067

DATE: MAY 2024

SHEET # C-100

SAVED: 9/15/26 3:53 PM



BULK REGULATIONS

	THE BEECHES		SINGLE FAMILY			SIX-PLEX			DUPLEX	
	INSTITUTIONAL CAMPUS REQUIREMENTS	PROPOSED	INSTITUTIONAL CAMPUS REQUIREMENTS	R-1-8 SINGLE FAMILY REQUIREMENTS	PROPOSED	INSTITUTIONAL CAMPUS REQUIREMENTS	R-1-8 SINGLE FAMILY REQUIREMENTS	PROPOSED	R-1-8 SINGLE FAMILY REQUIREMENTS	PROPOSED
MINIMUM LOT AREA	1.0 AC.	±21.50 AC.	1.0 AC.	DETACHED: 8,000-SF ATTACHED: 2,500-SF/DU	28,000-SF	1.0 AC.	DETACHED: 8,000-SF ATTACHED: 2,500-SF/DU	3,000-SF	DETACHED: 8,000-SF ATTACHED: 2,500-SF/DU	5,000-SF
MINIMUM LOT WIDTH	–	–	–	DETACHED: 60' ATTACHED: 50'/DU	84'	–	DETACHED: 60' ATTACHED: 50'/DU	20'	DETACHED: 60' ATTACHED: 50'/DU	50'
FRONT YARD	10' OR 25' IF ABUTTING RESIDENTIAL	25'	10' OR 25' IF ABUTTING RESIDENTIAL	25'	27'	10' OR 25' IF ABUTTING RESIDENTIAL	25'	25'	25'	25'
REAR YARD	"	25'	"	DETACHED: 30' ATTACHED: 25'	164'	"	DETACHED: 30' ATTACHED: 25'	25'	DETACHED: 30' ATTACHED: 25'	25'
SIDE YARD	"	25'	"	DETACHED: 10' ATTACHED: 15'	20'	"	DETACHED: 10' ATTACHED: 15'	15'	DETACHED: 10' ATTACHED: 15'	10'
MAXIMUM LOT COVERAGE	–	–	–	DETACHED: 35% ATTACHED: 50%	9%	–	DETACHED: 35% ATTACHED: 50%	45%	DETACHED: 35% ATTACHED: 50%	35%
MAXIMUM IMPERVIOUS SURFACE	–	–	–	DETACHED: 50% ATTACHED: 60%	11%	–	DETACHED: 50% ATTACHED: 60%	50%	DETACHED: 50% ATTACHED: 60%	45%
MAXIMUM BUILDING HEIGHT	60'	60'	60'	35'	35'	60'	35'	45'	35'	35'

PLAN
SCALE: 1"=100'

1"=100' 100 0 100 200

THIS DRAWING WAS PREPARED AT THE SCALE INDICATED IN THE TITLE BLOCK. INACCURACIES IN THE STATED SCALE MAY BE INTRODUCED WHEN DRAWINGS ARE REPRODUCED BY ANY MEANS. USE THE GRAPHIC SCALE BAR IN THE TITLE BLOCK TO DETERMINE THE ACTUAL SCALE OF THIS DRAWING.

IT IS A VIOLATION OF LAW FOR ANY PERSON, UNLESS ACTING UNDER THE DIRECTION OF A LICENSED ENGINEER, TO ALTER THIS DOCUMENT.

STATE OF NEW YORK
MICHAEL BYRON, JR.
087148
LICENSED PROFESSIONAL ENGINEER

NO.	DATE	DRAWING RELEASE
A	4/7/26	ISSUED FOR REGULATORY REVIEW

OVERALL SITE PLAN

MBL ENGINEERING, PLLC

NASCENTIA HEALTH INC.
7900 TURIN ROAD
CITY OF ROME
ONEIDA COUNTY

PROJECT # 22-067

DATE: MAY 2024

SHEET # C-101

SAVED: 9/15/26 3:53 PM

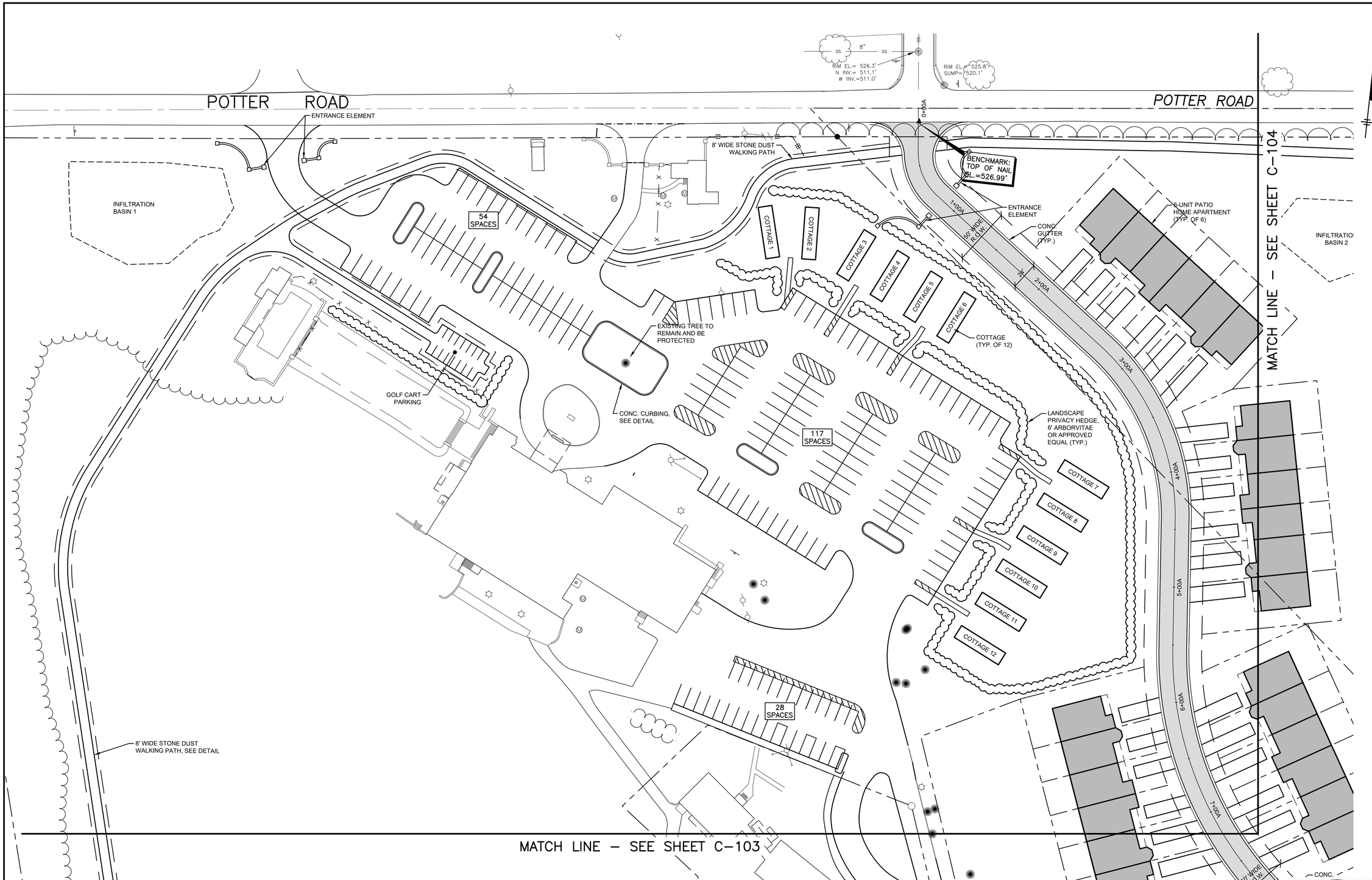

PLAN
SCALE: 1"=40'

1"=40' 40 0 40 80

THIS DRAWING WAS PREPARED AT THE SCALE INDICATED IN THE TITLE BLOCK. INACCURACIES IN THE STATED SCALE MAY BE INTRODUCED WHEN DRAWINGS ARE REPRODUCED BY ANY MEANS. USE THE GRAPHIC SCALE BAR IN THE TITLE BLOCK TO DETERMINE THE ACTUAL SCALE OF THIS DRAWING.

IT IS A VIOLATION OF LAW FOR ANY PERSON, UNLESS ACTING UNDER THE DIRECTION OF A LICENSED ENGINEER, TO ALTER THIS DOCUMENT.

STATE OF NEW YORK
MICHAEL BYRON LASELL
#087148
LICENSED PROFESSIONAL ENGINEER

NO.	DATE	DRAWING RELEASE
A	3/12/26	ISSUED FOR REGULATORY REVIEW

ENLARGED SITE PLAN

MBL ENGINEERING, PLLC

NASCENTIA HEALTH INC.
7900 TURIN ROAD
CITY OF ROME
ONEIDA COUNTY

PROJECT # 22-067

DATE: MAY 2024

SHEET # C-102

SAVED: 9/15/26 3:53 PM

MATCH LINE – SEE SHEET C-102

100-FOOT WETLAND SETBACK LIMITS

WETLAND 'A' DELINEATED BY DELTA ENGINEERS ON 4/29/2022

WETLAND 'B' DELINEATED BY DELTA ENGINEERS ON 4/29/2022

8' WIDE STONE DUST WALKING PATH

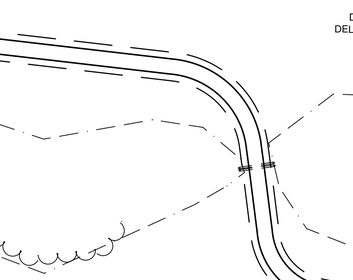

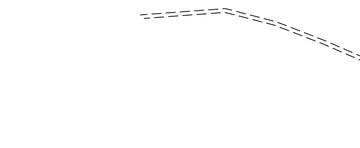

PAVILION FACILITY

SWIMMING POOL

6-UNIT PATIO HOME APARTMENT (TYP. OF 6)

50' WIDE R.O.W.

24'

CONC. GUTTER (TYP.)

MATCH LINE – SEE SHEET C-105

WETLAND 'C' DELINEATED BY DELTA ENGINEERS ON 4/30/2024

100-FOOT WETLAND SETBACK LIMITS

EX. GRAVEL DRIVE

(6) PICKLEBALL COURTS

GOLF C. PARKIN

40'

80'

50'

80'

BARN

1"=40'

40 0 40 80

PLAN

SCALE: 1"=40'

THIS DRAWING WAS PREPARED AT THE SCALE INDICATED IN THE TITLE BLOCK. INACCURACIES IN THE STATED SCALE MAY BE INTRODUCED WHEN DRAWINGS ARE REPRODUCED BY ANY MEANS. USE THE GRAPHIC SCALE BAR IN THE TITLE BLOCK TO DETERMINE THE ACTUAL SCALE OF THIS DRAWING.

IT IS A VIOLATION OF LAW FOR ANY PERSON, UNLESS ACTING UNDER THE DIRECTION OF A LICENSED ENGINEER, TO ALTER THIS DOCUMENT.

STATE OF NEW YORK
MICHAEL BYRON LEE
LICENSED PROFESSIONAL ENGINEER
097148

NO.	DATE	
A	3/12/26	ISSUED FOR REGULATORY REVIEW
		DRAWING RELEASE

ENLARGED SITE PLAN

MBL ENGINEERING, PLLC

NASCENTIA HEALTH INC.
7900 TURIN ROAD
CITY OF ROME
ONEIDA COUNTY

PROJECT # 22-067

DATE: MAY 2024

SHEET # C-103

SAVED: 9/15/26 3:53 PM



PLAN

SCALE: 1"=40'

1"=40' 40 0 40 80

THIS DRAWING WAS PREPARED AT THE SCALE INDICATED IN THE TITLE BLOCK. INACCURACIES IN THE STATED SCALE MAY BE INTRODUCED WHEN DRAWINGS ARE REPRODUCED BY ANY MEANS. USE THE GRAPHIC SCALE BAR IN THE TITLE BLOCK TO DETERMINE THE ACTUAL SCALE OF THIS DRAWING.

IT IS A VIOLATION OF LAW FOR ANY PERSON, UNLESS ACTING UNDER THE DIRECTION OF A LICENSED ENGINEER, TO ALTER THIS DOCUMENT.

STATE OF NEW YORK
MICHAEL BYRON LASSELL
LICENSED PROFESSIONAL ENGINEER

NO.	DATE	DRAWING RELEASE
A	3/12/26	ISSUED FOR REGULATORY REVIEW

ENLARGED SITE PLAN

MBL ENGINEERING, PLLC

NASCENTIA HEALTH INC.
7900 TURIN ROAD
CITY OF ROME
ONEIDA COUNTY

PROJECT # 22–067

DATE: MAY 2024

SHEET # C–104

SAVED: 9/15/26 3:57 PM

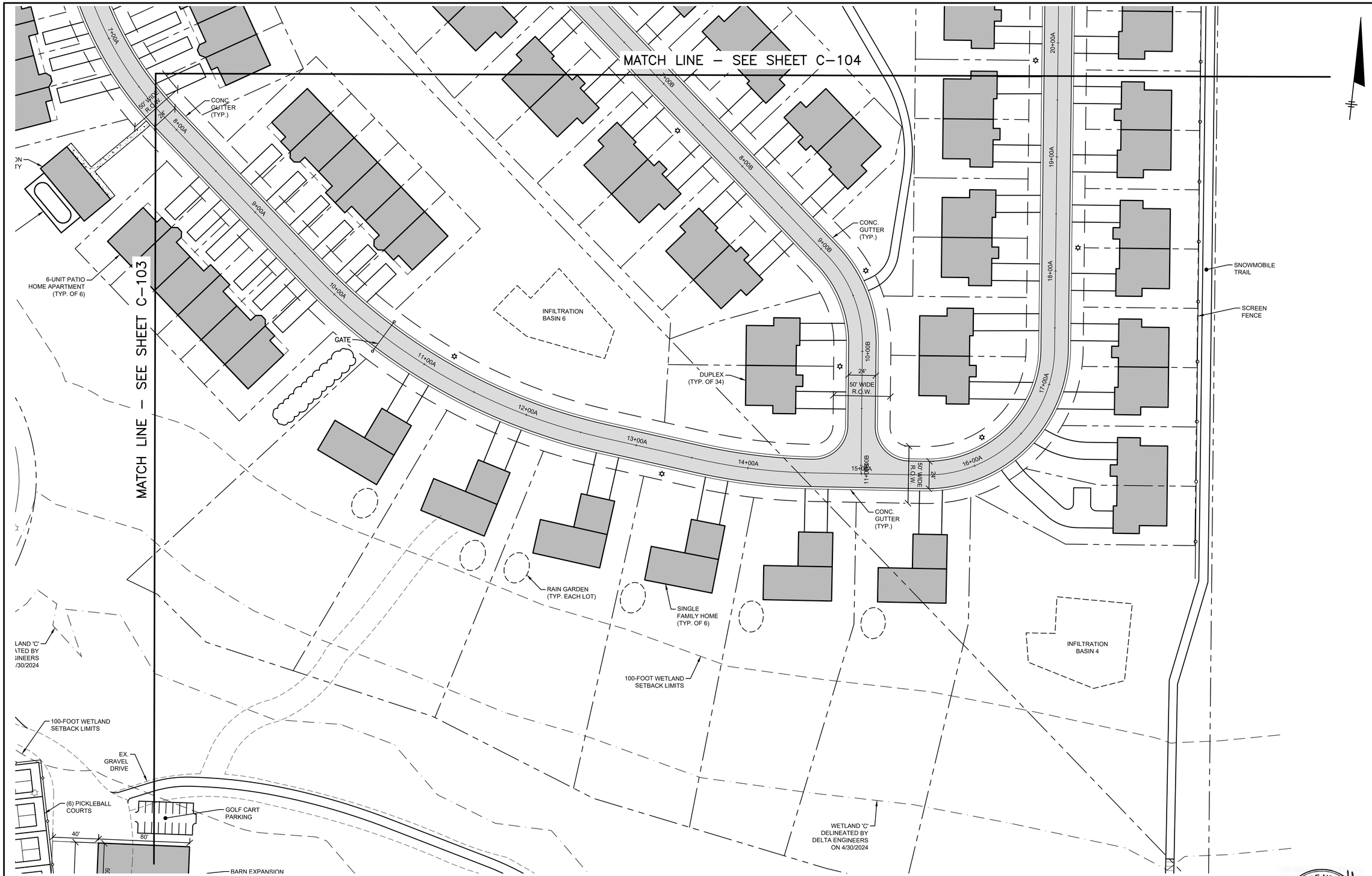

PLAN

SCALE: 1"=40'

1"=40' 40 0 40 80

THIS DRAWING WAS PREPARED AT THE SCALE INDICATED IN THE TITLE BLOCK. INACCURACIES IN THE STATED SCALE MAY BE INTRODUCED WHEN DRAWINGS ARE REPRODUCED BY ANY MEANS. USE THE GRAPHIC SCALE BAR IN THE TITLE BLOCK TO DETERMINE THE ACTUAL SCALE OF THIS DRAWING.

IT IS A VIOLATION OF LAW FOR ANY PERSON, UNLESS ACTING UNDER THE DIRECTION OF A LICENSED ENGINEER, TO ALTER THIS DOCUMENT.

STATE OF NEW YORK
MICHAEL BYRON LASELL
LICENSED PROFESSIONAL ENGINEER

NO.	DATE	DRAWING RELEASE
A	3/12/26	ISSUED FOR REGULATORY REVIEW

ENLARGED SITE PLAN

MBL ENGINEERING, PLLC

NASCENTIA HEALTH INC.
7900 TURIN ROAD
CITY OF ROME
ONEIDA COUNTY

PROJECT # 22–067

DATE: MAY 2024

SHEET # C–105

SAVED: 9/15/26 3:57 PM

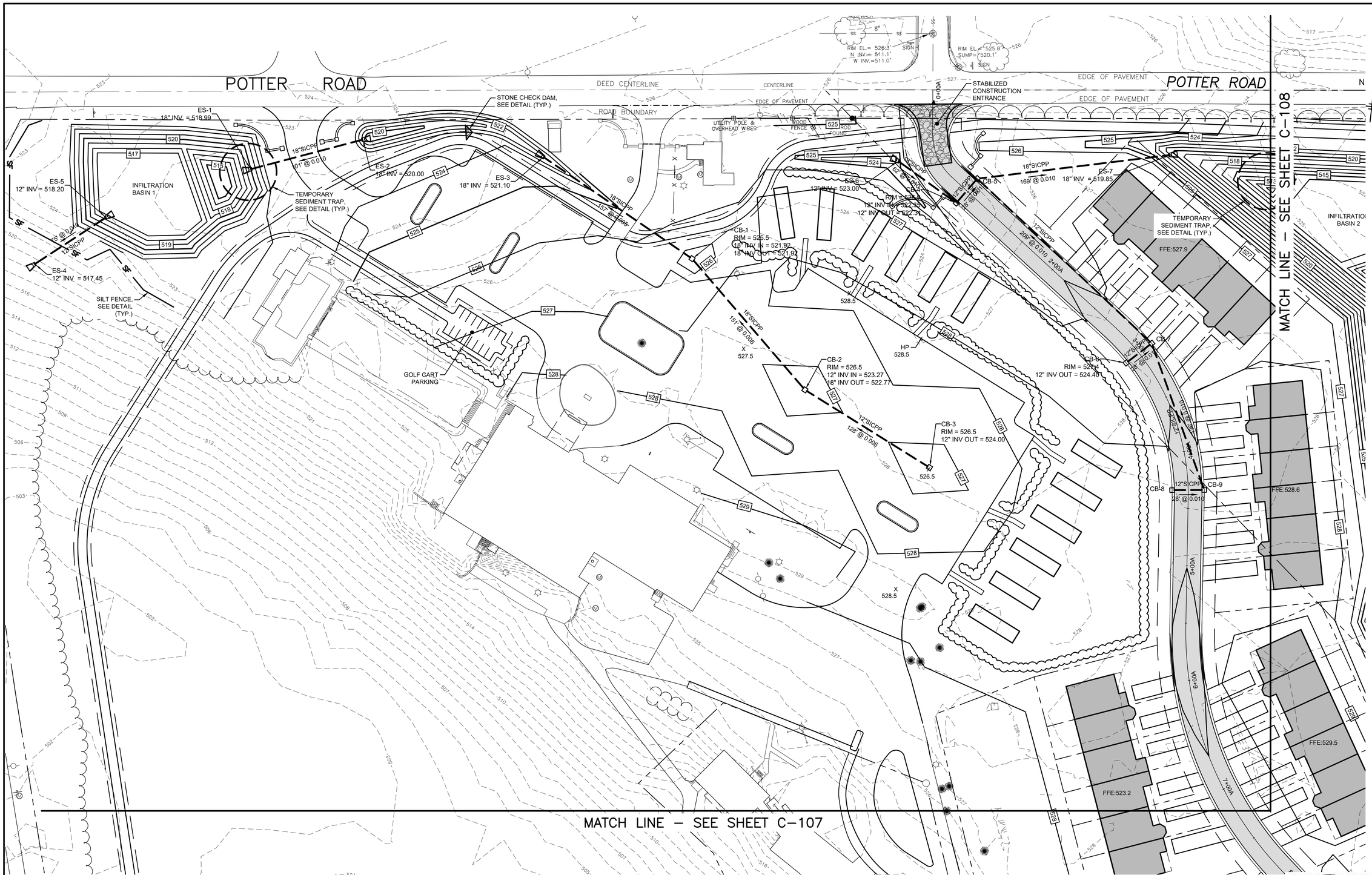

PLAN
SCALE: 1"=40'

1"=40' 40 0 40 80

THIS DRAWING WAS PREPARED AT THE SCALE INDICATED IN THE TITLE BLOCK. INACCURACIES IN THE STATED SCALE MAY BE INTRODUCED WHEN DRAWINGS ARE REPRODUCED BY ANY MEANS. USE THE GRAPHIC SCALE BAR IN THE TITLE BLOCK TO DETERMINE THE ACTUAL SCALE OF THIS DRAWING.

IT IS A VIOLATION OF LAW FOR ANY PERSON, UNLESS ACTING UNDER THE DIRECTION OF A LICENSED ENGINEER, TO ALTER THIS DOCUMENT.

STATE OF NEW YORK
MICHAEL BYRON LEE
087148
LICENSED PROFESSIONAL ENGINEER

NO.	DATE	DRAWING RELEASE
A	3/12/26	ISSUED FOR REGULATORY REVIEW

ENLARGED
SITE GRADING
& ESC PLAN

MBL ENGINEERING, PLLC

NASCENTIA HEALTH INC.
7900 TURIN ROAD
CITY OF ROME
ONEIDA COUNTY

PROJECT # 22–067

DATE: MAY 2024

SHEET # C–106

SAVED: 9/15/26 3:57 PM

MATCH LINE – SEE SHEET C–106

100-FOOT WETLAND SETBACK LIMITS

WETLAND 'A' DELINEATED BY DELTA ENGINEERS ON 4/29/2022

WETLAND 'B' DELINEATED BY DELTA ENGINEERS ON 4/29/2022

8' WIDE STONE DUST WALKING PATH

WETLAND 'C' DELINEATED BY DELTA ENGINEERS ON 4/30/2024

100-FOOT WETLAND SETBACK LIMITS

EX. GRAVEL DRIVE

(6) PICKLEBALL COURTS

GOLF C… PARKIN…

BARN

PAVILION FACILITY

SWIMMING POOL

6-UNIT PATIO HOME APARTMENT (TYP. OF 6)

FFE:523.2

FFE:523.2

CONC. GUTTER (TYP.)

50' WIDE R.O.W.

8'-00A

CB-11

CB-10

SILT FENCE, SEE DETAIL (TYP.)

MATCH LINE – SEE SHEET C–109

1"=40'

40 0 40 80

PLAN
SCALE: 1"=40'

THIS DRAWING WAS PREPARED AT THE SCALE INDICATED IN THE TITLE BLOCK. INACCURACIES IN THE STATED SCALE MAY BE INTRODUCED WHEN DRAWINGS ARE REPRODUCED BY ANY MEANS. USE THE GRAPHIC SCALE BAR IN THE TITLE BLOCK TO DETERMINE THE ACTUAL SCALE OF THIS DRAWING.

IT IS A VIOLATION OF LAW FOR ANY PERSON, UNLESS ACTING UNDER THE DIRECTION OF A LICENSED ENGINEER, TO ALTER THIS DOCUMENT.

STATE OF NEW YORK
MICHAEL BYRON LEWIS
LICENSED PROFESSIONAL ENGINEER
087148

NO.	DATE	
A	3/12/26	ISSUED FOR REGULATORY REVIEW
		DRAWING RELEASE

ENLARGED
SITE GRADING
& ESC PLAN

MBL ENGINEERING, PLLC

NASCENTIA HEALTH INC.
7900 TURIN ROAD
CITY OF ROME
ONEIDA COUNTY

PROJECT # 22–067

DATE: MAY 2024

SHEET # C–107

SAVED: 9/15/26 3:57 PM

POTTER ROAD

POTTER ROAD

MATCH LINE – SEE SHEET C–106

MATCH LINE – SEE SHEET C–109

INFILTRATION BASIN 2

INFILTRATION BASIN 3

INFILTRATION BASIN 5

CB-27
RIM = 522.0
12" INV OUT = 518.00

CB-28
RIM = 522.0
12" INV IN = 517.78
12" INV OUT = 517.78

ES-10
12" INV = 519.00

ES-8
18" INV = 515.45

CB-25
RIM = 522.5
12" INV IN = 517.50
12" INV IN = 517.50
12" INV OUT = 517.50

ES-9
12" INV = 520.00

CB-23
RIM = 521.8
12" INV OUT = 518.90

CB-24
RIM = 521.8
12" INV IN = 518.67
12" INV OUT = 518.67

CB-21
RIM = 522.2
12" INV IN = 517.96
12" INV OUT = 517.96

CB-22
RIM = 522.4
12" INV OUT = 518.20

ES-11
12" INV = 516.50

CB-7

CB-8

CB-9

CB-29

CB-30

CB-31

CB-32

CB-33

TEMPORARY SEDIMENT TRAP, SEE DETAIL (TYP.)

TEMPORARY SEDIMENT TRAP, SEE DETAIL (TYP.)

STONE CHECK DAM, SEE DETAIL (TYP.)

SNOWMOBILE TRAIL

SCREEN FENCE

PAVILION FACILITY

GOLF CART PARKING

(2) BOCCE BALL COURTS

SWIMMING POOL

FUTURE BOCCE BALL COURTS

FFE:527.9
FFE:523.2
FFE:523.3
FFE:523.8
FFE:523.8
FFE:524.4
FFE:523.2
FFE:523.5
FFE:524.5
FFE:525.2
FFE:528.6
FFE:523.0
FFE:522.3
FFE:525.5
FFE:525.8
FFE:522.8
FFE:523.3
FFE:526.0
FFE:526.0
FFE:529.5
FFE:522.9
FFE:526.0
FFE:526.0
FFE:522.6
FFE:523.8
FFE:523.2
FFE:525.5
FFE:525.2
FFE:524.0

0+00B
1+00B
2+00B
3+00B
4+00B
5+00B
6+00B
3+00A
4+00A
5+00A
6+00A
7+00A
20+00A
21+00A
22+00A
24+00A
25+00A
27+99A

12"SICPP @ 0.008
12"SICPP @ 0.016
12"SICPP @ 0.010
18"SICPP @ 0.008
12"SICPP @ 0.010
12"SICPP @ 0.010
12"SICPP @ 0.010



PLAN
SCALE: 1"=40'

THIS DRAWING WAS PREPARED AT THE SCALE INDICATED IN THE TITLE BLOCK. INACCURACIES IN THE STATED SCALE MAY BE INTRODUCED WHEN DRAWINGS ARE REPRODUCED BY ANY MEANS. USE THE GRAPHIC SCALE BAR IN THE TITLE BLOCK TO DETERMINE THE ACTUAL SCALE OF THIS DRAWING.

IT IS A VIOLATION OF LAW FOR ANY PERSON, UNLESS ACTING UNDER THE DIRECTION OF A LICENSED ENGINEER, TO ALTER THIS DOCUMENT.

STATE OF NEW YORK
MICHAEL BYRON LASSELL
LICENSED PROFESSIONAL ENGINEER

NO.	DATE	DRAWING RELEASE
A	3/11/26	ISSUED FOR REGULATORY REVIEW

ENLARGED SITE GRADING & ESC PLAN

MBL ENGINEERING, PLLC

NASCENTIA HEALTH INC.
7900 TURIN ROAD
CITY OF ROME
ONEIDA COUNTY

PROJECT # 22-067

DATE: MAY 2024

SHEET # C-109

SAVED: 9/15/26 3:57 PM

SAVED: 9/15/26 3:57 PM

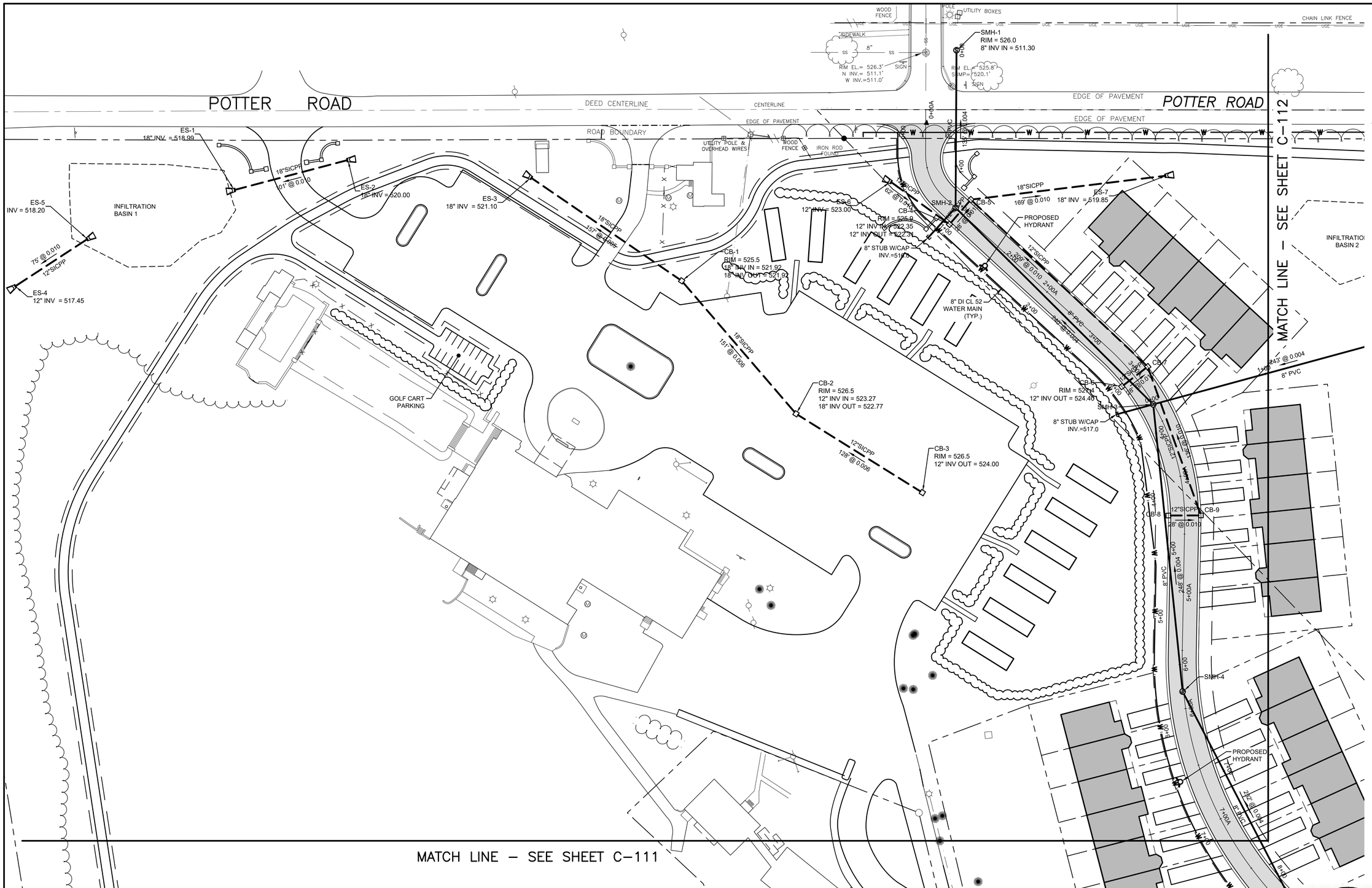

PLAN
SCALE: 1"=40'

1"=40' 40 0 40 80

THIS DRAWING WAS PREPARED AT THE SCALE INDICATED IN THE TITLE BLOCK. INACCURACIES IN THE STATED SCALE MAY BE INTRODUCED WHEN DRAWINGS ARE REPRODUCED BY ANY MEANS. USE THE GRAPHIC SCALE BAR IN THE TITLE BLOCK TO DETERMINE THE ACTUAL SCALE OF THIS DRAWING.

IT IS A VIOLATION OF LAW FOR ANY PERSON, UNLESS ACTING UNDER THE DIRECTION OF A LICENSED ENGINEER, TO ALTER THIS DOCUMENT.

STATE OF NEW YORK
MICHAEL BYRON LEE
LICENSED PROFESSIONAL ENGINEER
087148

NO.	DATE	DRAWING RELEASE
A	3/12/26	ISSUED FOR REGULATORY REVIEW

ENLARGED SITE UTILITY PLAN

MBL ENGINEERING, PLLC

NASCENTIA HEALTH INC.
7900 TURIN ROAD
CITY OF ROME
ONEIDA COUNTY

PROJECT # 22-067

DATE: MAY 2024

SHEET # C-110

SAVED: 9/15/26 3:57 PM

MATCH LINE – SEE SHEET C-110

100-FOOT WETLAND SETBACK LIMITS

WETLAND 'A' DELINEATED BY DELTA ENGINEERS ON 4/29/2022

WETLAND 'B' DELINEATED BY DELTA ENGINEERS ON 4/29/2022

PAVILION FACILITY

SWIMMING POOL

SMH-5

CB-11

CB-10

WETLAND 'C' DELINEATED BY DELTA ENGINEERS ON 4/30/2024

100-FOOT WETLAND SETBACK LIMITS

(6) PICKLEBALL COURTS

MATCH LINE – SEE SHEET C-113

PLAN
SCALE: 1"=40'

1"=40' 40 0 40 80

THIS DRAWING WAS PREPARED AT THE SCALE INDICATED IN THE TITLE BLOCK. INACCURACIES IN THE STATED SCALE MAY BE INTRODUCED WHEN DRAWINGS ARE REPRODUCED BY ANY MEANS. USE THE GRAPHIC SCALE BAR IN THE TITLE BLOCK TO DETERMINE THE ACTUAL SCALE OF THIS DRAWING.

IT IS A VIOLATION OF LAW FOR ANY PERSON, UNLESS ACTING UNDER THE DIRECTION OF A LICENSED ENGINEER, TO ALTER THIS DOCUMENT.

STATE OF NEW YORK
MICHAEL BYRON LEE
LICENSED PROFESSIONAL ENGINEER
087148

NO.	DATE	
A	3/12/26	ISSUED FOR REGULATORY REVIEW
		DRAWING RELEASE

ENLARGED SITE UTILITY PLAN

MBL ENGINEERING, PLLC

NASCENTIA HEALTH INC.
7900 TURIN ROAD
CITY OF ROME
ONEIDA COUNTY

PROJECT # 22-067

DATE: MAY 2024

SHEET # C-111

SAVED: 9/15/26 3:57 PM

POTTER ROAD

POTTER ROAD

MATCH LINE – SEE SHEET C–110

MATCH LINE – SEE SHEET C–113

INFILTRATION BASIN 2

INFILTRATION BASIN 3

INFILTRATION BASIN 5

CB-27
RIM = 522.0
12" INV OUT = 518.00

CB-28
RIM = 522.0
12" INV IN = 517.78
12" INV OUT = 517.78

ES-10
12" INV = 519.00

3/4" WATER SERVICE CURB STOP (TYP. ALL UNITS)

ES-8
18" INV = 515.45

SMH-12

SMH-13

CB-25
RIM = 522.5 27+00A
12" INV IN = 517.50
12" INV IN = 517.50
12" INV OUT = 517.50

ES-9
12" INV = 520.00

PROPOSED HYDRANT

8" DI CL 52 WATER MAIN (TYP.)

CB-29

CB-30

CB-31

SMH-14

CB-32

CB-33

SMH-15

SNOWMOBILE TRAIL

SCREEN FENCE

CB-23
RIM = 521.8
12" INV OUT = 518.90

CB-24
RIM = 521.8
12" INV IN = 518.67
12" INV OUT = 518.67

CB-7

CB-8

CB-9

SMH-4

PROPOSED HYDRANT

PAVILION FACILITY

GOLF CART PARKING

(2) BOCCE BALL COURTS

SWIMMING POOL

FUTURE BOCCE BALL COURTS

PROPOSED HYDRANT

SMH-11

SMH-16

CB-21
RIM = 522.2
12" INV IN = 517.98
12" INV OUT = 517.98

CB-22
RIM = 522.4
12" INV OUT = 518.20

PROPOSED HYDRANT

ES-11
12" INV = 516.50

SMH-17

RIM = 523.8
8" INV OUT = 519.63

PLAN
SCALE: 1"=40'

1"=40' 40 0 40 80

THIS DRAWING WAS PREPARED AT THE SCALE INDICATED IN THE TITLE BLOCK. INACCURACIES IN THE STATED SCALE MAY BE INTRODUCED WHEN DRAWINGS ARE REPRODUCED BY ANY MEANS. USE THE GRAPHIC SCALE BAR IN THE TITLE BLOCK TO DETERMINE THE ACTUAL SCALE OF THIS DRAWING.

IT IS A VIOLATION OF LAW FOR ANY PERSON, UNLESS ACTING UNDER THE DIRECTION OF A LICENSED ENGINEER, TO ALTER THIS DOCUMENT.

STATE OF NEW YORK
MICHAEL BYRON LAMB
LICENSED PROFESSIONAL ENGINEER
093714B

NO.	DATE	DRAWING RELEASE
A	3/12/26	ISSUED FOR REGULATORY REVIEW

ENLARGED SITE UTILITY PLAN

MBL ENGINEERING, PLLC

NASCENTIA HEALTH INC.
7900 TURIN ROAD
CITY OF ROME
ONEIDA COUNTY

PROJECT # 22–067

DATE: MAY 2024

SHEET # C–112

SAVED: 9/15/26 4:01 PM

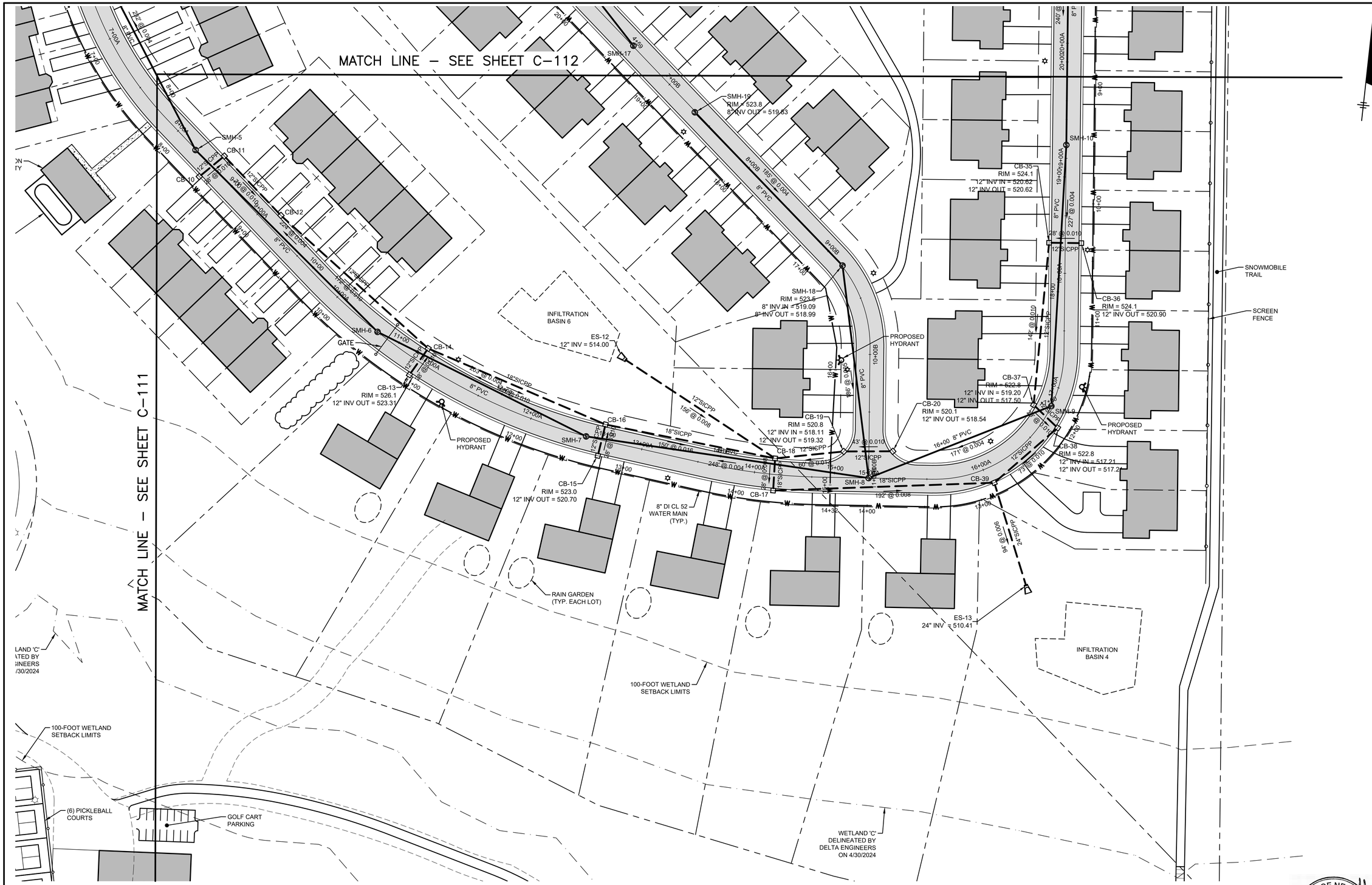

PLAN

SCALE: 1"=40'

1"=40' 40 0 40 80

THIS DRAWING WAS PREPARED AT THE SCALE INDICATED IN THE TITLE BLOCK. INACCURACIES IN THE STATED SCALE MAY BE INTRODUCED WHEN DRAWINGS ARE REPRODUCED BY ANY MEANS. USE THE GRAPHIC SCALE BAR IN THE TITLE BLOCK TO DETERMINE THE ACTUAL SCALE OF THIS DRAWING.

IT IS A VIOLATION OF LAW FOR ANY PERSON, UNLESS ACTING UNDER THE DIRECTION OF A LICENSED ENGINEER, TO ALTER THIS DOCUMENT.

STATE OF NEW YORK
MICHAEL BYRON LASALLE
#087148
LICENSED PROFESSIONAL ENGINEER

NO.	DATE	DRAWING RELEASE
A	3/12/26	ISSUED FOR REGULATORY REVIEW

ENLARGED SITE UTILITY PLAN

MBL ENGINEERING, PLLC

NASCENTIA HEALTH INC.
7900 TURIN ROAD
CITY OF ROME
ONEIDA COUNTY

PROJECT # 22–067

DATE: MAY 2024

SHEET # C–113

SAVED: 9/15/26 4:01 PM

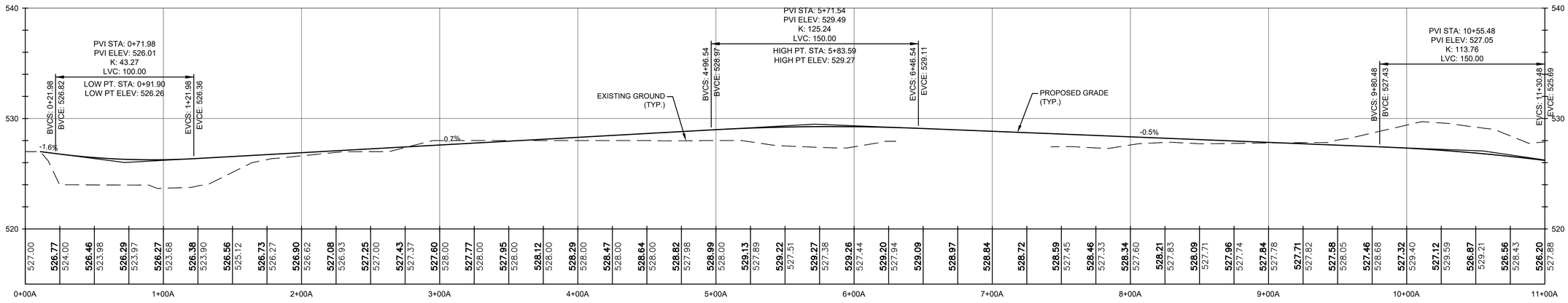

CENTERLINE ROAD PROFILE – ROAD A

SCALE: HORIZ. 1"=40'
VERT. 1"=10'

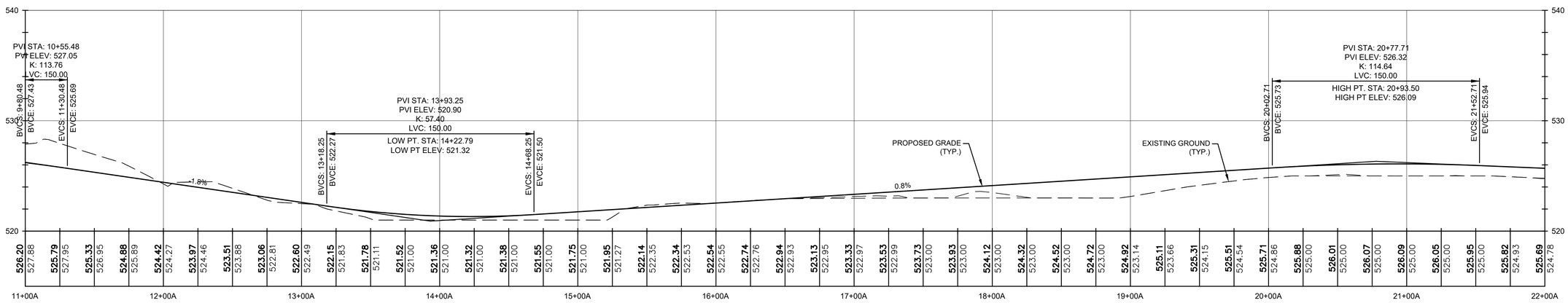

CENTERLINE ROAD PROFILE – ROAD A

SCALE: HORIZ. 1"=40'
VERT. 1"=10'

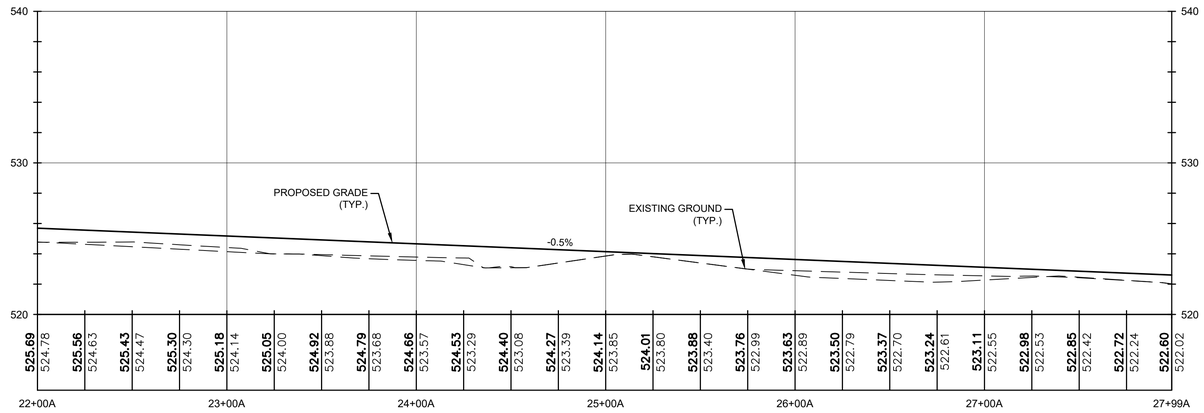

CENTERLINE ROAD PROFILE – ROAD A

SCALE: HORIZ. 1"=40'
VERT. 1"=10'

1"=40' 40 0 40 80
1"=10' 10 0 10 20

THIS DRAWING WAS PREPARED AT THE SCALE INDICATED IN THE TITLE BLOCK. INACCURACIES IN THE STATED SCALE MAY BE INTRODUCED WHEN DRAWINGS ARE REPRODUCED BY ANY MEANS. USE THE GRAPHIC SCALE BAR IN THE TITLE BLOCK TO DETERMINE THE ACTUAL SCALE OF THIS DRAWING.

IT IS A VIOLATION OF LAW FOR ANY PERSON, UNLESS ACTING UNDER THE DIRECTION OF A LICENSED ENGINEER, TO ALTER THIS DOCUMENT.

STATE OF NEW YORK
MICHAEL BYRON LASELL
LICENSED PROFESSIONAL ENGINEER

NO.	DATE	DRAWING RELEASE
A	3/12/26	ISSUED FOR REGULATORY REVIEW

CENTERLINE ROAD PROFILES ROAD A

MBL ENGINEERING, PLLC

NASCENTIA HEALTH INC.
7900 TURIN ROAD
CITY OF ROME
ONEIDA COUNTY

PROJECT # 22-067

DATE: MAY 2024

SHEET # C-201

SAVED: 3/17/26 5:01 PM

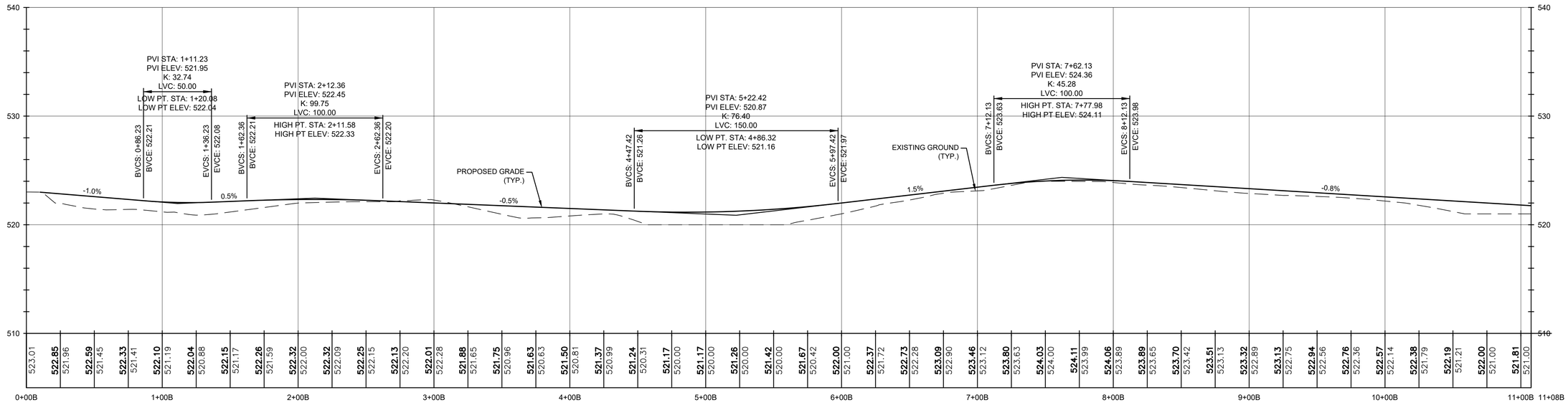

CENTERLINE ROAD PROFILE – ROAD B

SCALE: HORIZ. 1"=40'
VERT. 1"=10'

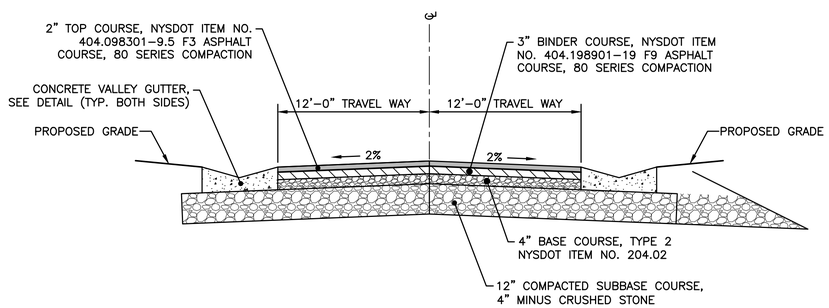

ACCESS ROAD – TYPICAL SECTION

NOT TO SCALE

NO.	DATE	
A	3/12/26	ISSUED FOR REGULATORY REVIEW
		DRAWING RELEASE

CENTERLINE ROAD PROFILE ROAD B

MBL ENGINEERING, PLLC

NASCENTIA HEALTH INC.
7900 TURIN ROAD
CITY OF ROME
ONEIDA COUNTY

PROJECT # 22-067

DATE: MAY 2024

SHEET # C-202

1"=40' 40 0 40 80
1"=10' 10 0 10 20

THIS DRAWING WAS PREPARED AT THE SCALE INDICATED IN THE TITLE BLOCK. INACCURACIES IN THE STATED SCALE MAY BE INTRODUCED WHEN DRAWINGS ARE REPRODUCED BY ANY MEANS. USE THE GRAPHIC SCALE BAR IN THE TITLE BLOCK TO DETERMINE THE ACTUAL SCALE OF THIS DRAWING.

IT IS A VIOLATION OF LAW FOR ANY PERSON, UNLESS ACTING UNDER THE DIRECTION OF A LICENSED ENGINEER, TO ALTER THIS DOCUMENT.

PRELIMINARY NOT FOR CONSTRUCTION
DATE: 03/12/2026

SAVED: 9/15/26 4:01 PM

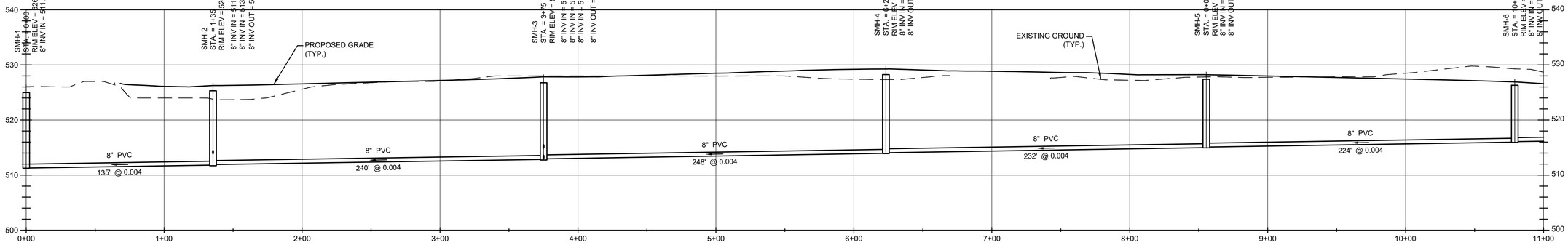

SANITARY SEWER PROFILE

SCALE: HORIZ. 1"=40'
VERT. 1"=10'

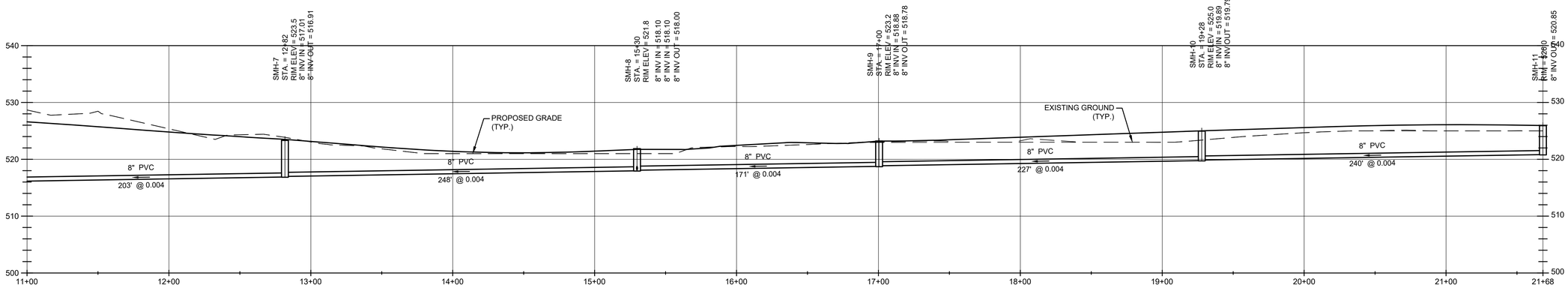

SANITARY SEWER PROFILE

SCALE: HORIZ. 1"=40'
VERT. 1"=10'

NO.	DATE	DRAWING RELEASE
A	3/12/26	ISSUED FOR REGULATORY REVIEW

SANITARY SEWER PROFILES

MBL ENGINEERING, PLLC

NASCENTIA HEALTH INC.
7900 TURIN ROAD
CITY OF ROME
ONEIDA COUNTY

PROJECT # 22-067

DATE: MAY 2024

SHEET # C-203

1"=40' 40 0 40 80
1"=10' 10 0 10 20

THIS DRAWING WAS PREPARED AT THE SCALE INDICATED IN THE TITLE BLOCK. INACCURACIES IN THE STATED SCALE MAY BE INTRODUCED WHEN DRAWINGS ARE REPRODUCED BY ANY MEANS. USE THE GRAPHIC SCALE BAR IN THE TITLE BLOCK TO DETERMINE THE ACTUAL SCALE OF THIS DRAWING.

IT IS A VIOLATION OF LAW FOR ANY PERSON, UNLESS ACTING UNDER THE DIRECTION OF A LICENSED ENGINEER, TO ALTER THIS DOCUMENT.

STATE OF NEW YORK
MICHAEL BYRON LITTELL
087148
LICENSED PROFESSIONAL ENGINEER

SAVED: 9/15/26 4:01 PM

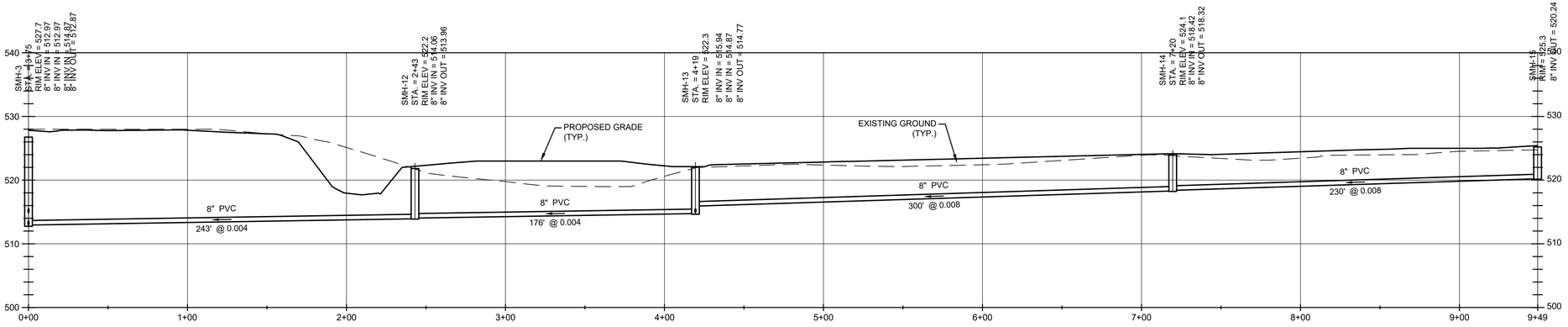

SANITARY SEWER PROFILE

SCALE: HORIZ. 1"=40'
VERT. 1"=10'

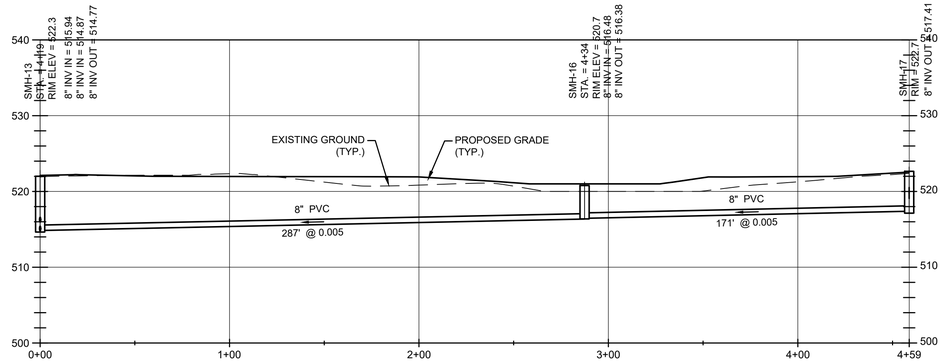

SANITARY SEWER PROFILE

SCALE: HORIZ. 1"=40'
VERT. 1"=10'

1"=40' 40 0 40 80

1"=10' 10 0 10 20

THIS DRAWING WAS PREPARED AT THE SCALE INDICATED IN THE TITLE BLOCK. INACCURACIES IN THE STATED SCALE MAY BE INTRODUCED WHEN DRAWINGS ARE REPRODUCED BY ANY MEANS. USE THE GRAPHIC SCALE BAR IN THE TITLE BLOCK TO DETERMINE THE ACTUAL SCALE OF THIS DRAWING.

IT IS A VIOLATION OF LAW FOR ANY PERSON, UNLESS ACTING UNDER THE DIRECTION OF A LICENSED ENGINEER, TO ALTER THIS DOCUMENT.

STATE OF NEW YORK
MICHAEL BYRON LAPPELL
LICENSED PROFESSIONAL ENGINEER
#087148

NO.	DATE	DRAWING RELEASE
A	3/12/26	ISSUED FOR REGULATORY REVIEW

SANITARY SEWER PROFILES

MBL ENGINEERING, PLLC

NASCENTIA HEALTH INC.
7900 TURIN ROAD
CITY OF ROME
ONEIDA COUNTY

PROJECT # 22-067

DATE: MAY 2024

SHEET # C-204

SAVED: 9/15/26 4:01 PM

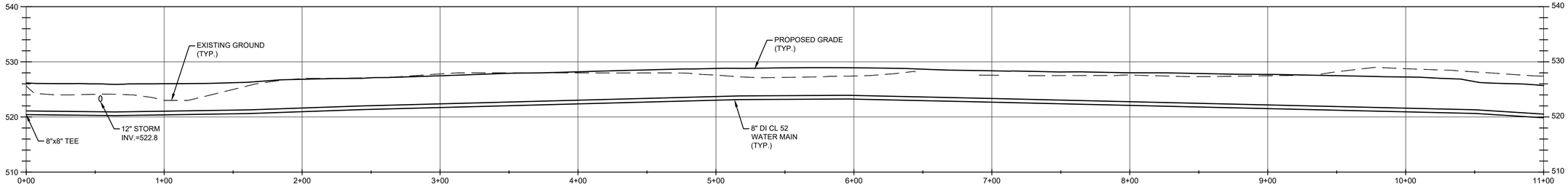

WATER MAIN PROFILE

SCALE: HORIZ. 1"=40'
VERT. 1"=10'

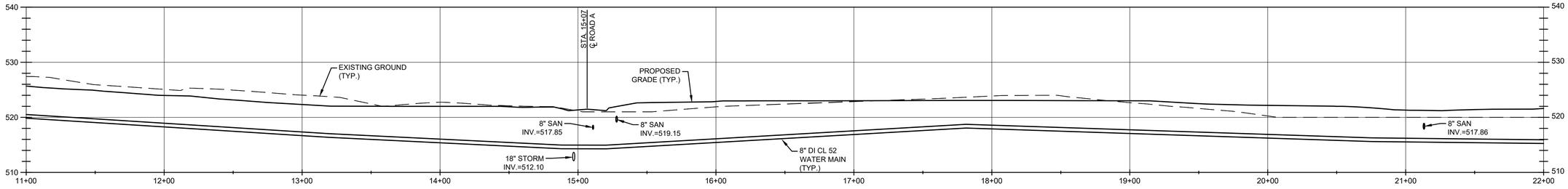

WATER MAIN PROFILE

SCALE: HORIZ. 1"=40'
VERT. 1"=10'

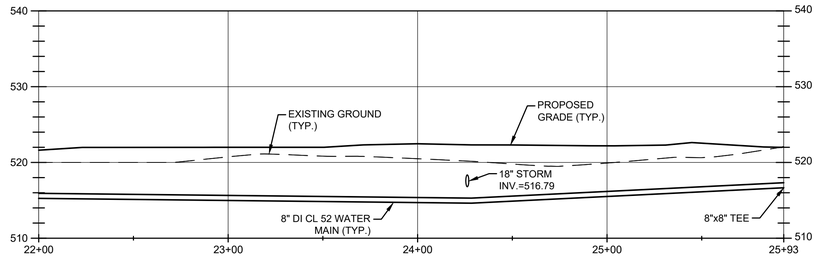

WATER MAIN PROFILE

SCALE: HORIZ. 1"=40'
VERT. 1"=10'

NO.	DATE	
A	3/12/26	ISSUED FOR REGULATORY REVIEW
		DRAWING RELEASE

WATER MAIN PROFILES

MBL ENGINEERING, PLLC

NASCENTIA HEALTH INC.
7900 TURIN ROAD
CITY OF ROME
ONEIDA COUNTY

PROJECT # 22-067

DATE: MAY 2024

SHEET # C-205

1"=40' 40 0 40 80
1"=10' 10 0 10 20

THIS DRAWING WAS PREPARED AT THE SCALE INDICATED IN THE TITLE BLOCK. INACCURACIES IN THE STATED SCALE MAY BE INTRODUCED WHEN DRAWINGS ARE REPRODUCED BY ANY MEANS. USE THE GRAPHIC SCALE BAR IN THE TITLE BLOCK TO DETERMINE THE ACTUAL SCALE OF THIS DRAWING.

IT IS A VIOLATION OF LAW FOR ANY PERSON, UNLESS ACTING UNDER THE DIRECTION OF A LICENSED ENGINEER, TO ALTER THIS DOCUMENT.

STATE OF NEW YORK
MICHAEL BYRON LEE
LICENSED PROFESSIONAL ENGINEER
087148

SAVED: 9/15/26 4:01 PM

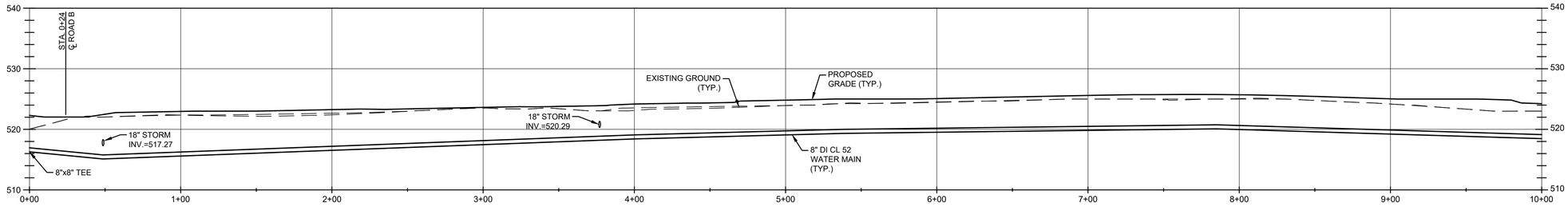

WATER MAIN PROFILE

SCALE: HORIZ. 1"=40'
VERT. 1"=10'

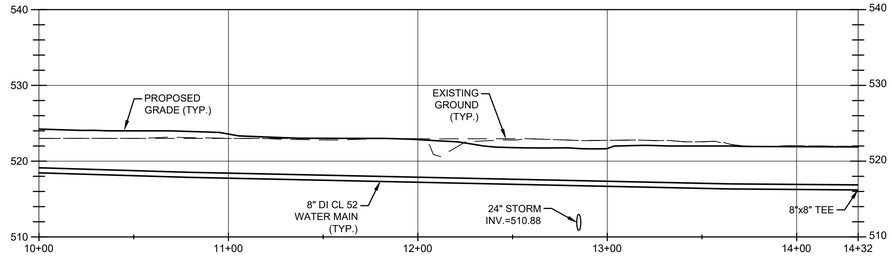

WATER MAIN PROFILE

SCALE: HORIZ. 1"=40'
VERT. 1"=10'

NO.	DATE	DRAWING RELEASE
A	3/12/26	ISSUED FOR REGULATORY REVIEW

WATER MAIN PROFILES

MBL ENGINEERING, PLLC

NASCENTIA HEALTH INC.
7900 TURIN ROAD
CITY OF ROME
ONEIDA COUNTY

PROJECT # 22-067

DATE: MAY 2024

SHEET # C-206

1"=40' 40 0 40 80

1"=10' 10 0 10 20

THIS DRAWING WAS PREPARED AT THE SCALE INDICATED IN THE TITLE BLOCK. INACCURACIES IN THE STATED SCALE MAY BE INTRODUCED WHEN DRAWINGS ARE REPRODUCED BY ANY MEANS. USE THE GRAPHIC SCALE BAR IN THE TITLE BLOCK TO DETERMINE THE ACTUAL SCALE OF THIS DRAWING.

IT IS A VIOLATION OF LAW FOR ANY PERSON, UNLESS ACTING UNDER THE DIRECTION OF A LICENSED ENGINEER, TO ALTER THIS DOCUMENT.

STATE OF NEW YORK
MICHAEL BYRON LASKE
#087148
LICENSED PROFESSIONAL ENGINEER

SAVED: 9/15/26 4:01 PM

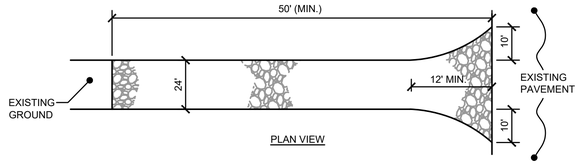

PLAN VIEW

NOTES:

1. STONE SIZE - USE 2" STONE, OR RECLAIMED OR RECYCLED CONCRETE EQUIVALENT.
2. LENGTH - AS REQUIRED, BUT NOT LESS THAN 50 FEET
3. THICKNESS - NOT LESS THAN 6".
4. WIDTH 24' MINIMUM, BUT NOT LESS THAN THE FULL WIDTH AT POINTS WHERE EGRESS OCCURS.
5. FILTER FABRIC (MIRAFI 140N OR EQUAL) - WILL BE PLACED OVER THE ENTIRE AREA PRIOR TO PLACING OF STONE.
6. SURFACE WATER - ALL SURFACE WATER FLOWING OR DIVERTED TOWARDS CONSTRUCTION ENTRANCES SHALL BE PIPED ACROSS THE ENTRANCE. IF PIPING IS NOT POSSIBLE, A MOUNTABLE BERM 3' WIDE (MIN.) WITH 5:1 SLOPES WILL BE PERMITTED.
7. MAINTENANCE - THE ENTRANCES SHALL BE MAINTAINED IN A CONDITION WHICH WILL PREVENT TRACKING OR FLOWING OF SEDIMENT ONTO PUBLIC RIGHTS-OF-WAY. THIS MAY REQUIRE PERIODIC OP DRESSING WITH ADDITIONAL STONE AS CONDITIONS DEMAND AND REPAIR AND/OR CLEAN OUT OF ANY MEASURES USED TO TRAP SEDIMENT. ALL SEDIMENT SPILLED, DROPPED, WASHED OR TRACKED ONTO PUBLIC RIGHTS-OF-WAY MUST BE REMOVED IMMEDIATELY.
8. WASHING - WHEELS SHALL BE CLEANED TO REMOVE SEDIMENT PRIOR TO ENTRANCE ONTO PUBLIC RIGHTS-OF-WAY. WHEN WASHING IS REQUIRED, IT SHALL BE DONE ON AN AREA STABILIZED WITH STONE AND WHICH DRAINS INTO ADJACENT SEDIMENT BASINS.
9. PERIODIC INSPECTION AND NEEDED MAINTENANCE SHALL BE PROVIDED IN ACCORDANCE WITH THE PROJECT STORM WATER POLLUTION PREVENTION PLAN.
10. CONTRACTOR SHALL FIELD LOCATE AS REQUIRED WITH APPROVAL BY THE OWNER'S REPRESENTATIVE.

A STABILIZED CONSTRUCTION ENTRANCE DETAIL

NOT TO SCALE

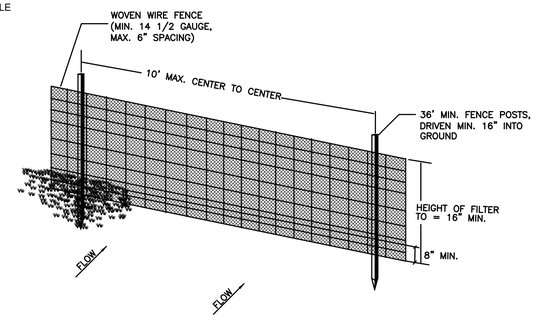

PERSPECTIVE VIEW

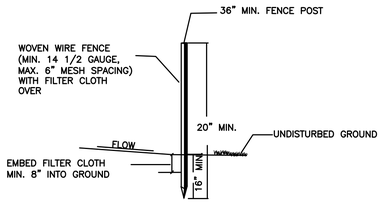

SECTION

CONSTRUCTION NOTES FOR FABRICATED SLIT FENCE:

1. WOVEN WIRE FENCE TO BE FASTENED SECURLY TO FENCE POSTS WITH WIRE TIES OR STAPLES.
2. FILTER COLTH TO BE FASTENED SECURLY TO WOVEN WIRE FENCE WITH TIES SPACED EVERY 24" AT TOP AND MID SECTION.
3. WHEN TWO SECTIONS OF FILTER CLOTH ADJOIN EACH OTHER THEY SHALL BE OVER-LAPPED BY 6" AND FOLDED.
4. MAINTENANCE SHALL BE PERFORMED AS NEEDED AND MATERIAL REMOVED WHEN "BULGES" DEVEOLP IN THE SILT FENCE.

POSTS:	STEEL EITHER "T" OR "U" TYPE OR 2" HARDWOOD
FENCE:	WOVEN WIRE, 14 1/2 GAUGE 6" MAX. MESH OPENINGS.
FILTER CLOTH:	FILTER X, MIRAFI 100X, STABILINKA T140N OR APPROVED EQUAL
PREFABRICATED UNIT:	GEOFAB, ENVIROFENCE, OR APPROVED EQUAL

B SILT FENCE DETAIL

NOT TO SCALE

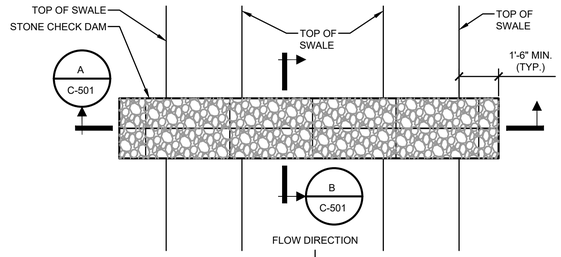

PLAN

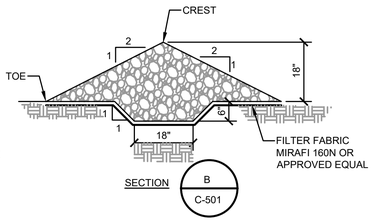

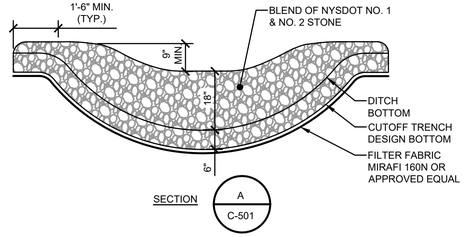

NOTES:

1. STONE SHALL BE PLACED ON A FILTER FABRIC FOUNDATION.
2. SET SPACING OF CHECK DAMS SUCH THAT THE ELEVATION OF THE CREST OF THE DOWNSTREAM DAM IS AT THE SAME ELEVATION OF THE TOE OF THE UPSTREAM DAM.
3. EXTEND THE STONE A MINIMUM OF 1.5' BEYOND THE DITCH BANKS TO PREVENT CUTTING AROUND THE DAM.

C STONE CHECK DAM DETAIL

NOT TO SCALE

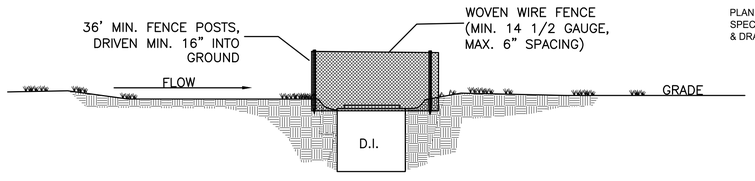

NOT TO SCALE

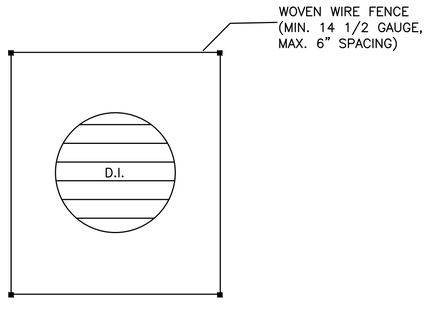

PLAN

D D.I. PROTECTION DETAIL

NOT TO SCALE

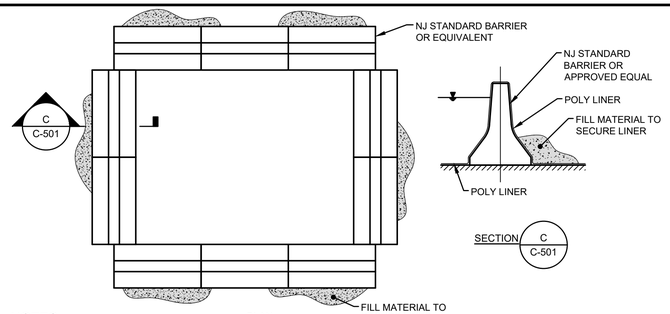

PLAN

NOTES:

1. CONTRACTOR SHALL INSTALL PER NYS DEC STANDARDS AND SPECIFICATIONS FOR EROSION AND SEDIMENT CONTROL.
2. CONTRACTOR TO FIELD LOCATE AND OBTAIN APPROVAL FROM OWNER'S REPRESENTATIVE PRIOR TO DISCHARGING CONCRETE WASH WATER.
3. WATER MAY BE DRAINED ONCE CONCRETE HAS CURED AND 24 HOURS OF SETTLEMENT HAS OCCURRED.
4. CONTRACTOR TO DISPOSE OF CURED CONCRETE OFFSITE OR IN LOCATION APPROVED BY OWNER.
5. SHALL BE SIZED TO CONTAIN ALL CONCRETE WASHWATER AND HOLD FOR A 24 HOUR PERIOD.

E CONCRETE WASHDOWN CONTAINMENT DETAIL

NOT TO SCALE

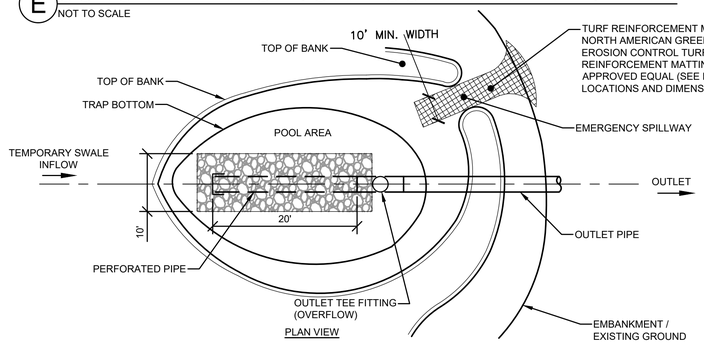

PLAN VIEW

PLAN AND PROFILE VIEWS ARE GENERAL AND FOR ILLUSTRATION ONLY. SPECIFIC GEOMETRY AND LAYOUT ARE IN ACCORDANCE WITH THE GRADING & DRAINAGE PLAN. ELEVATIONS ARE PRESENTED IN THE TABLE BELOW.

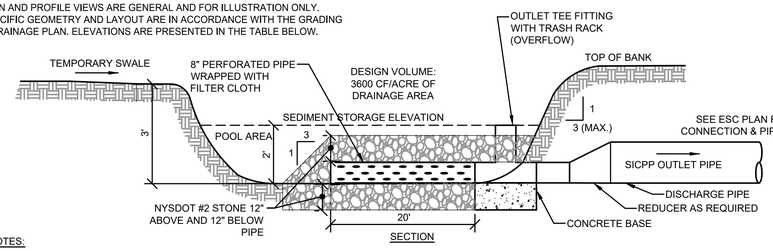

NOTES:

1. TRAP SHALL BE FIELD LOCATED IN AN AREA DOWNSTREAM OF SOIL DISTURBANCE ACTIVITIES AND IN AN AREA TO WHICH STORMWATER RUNOFF FROM THE CONSTRUCTION SITE CAN BE DIRECTED TO. THE TRAP SHALL NOT BE LOCATED WITHIN A PERMANENT BIOFILTRATION AREA.
2. PIPE SHALL BE PERFORATED WITH ONE INCH HOLES SPACED SIX INCHES VERTICALLY AND HORIZONTALLY AND LOCATED IN THE CONCAVE PORTION OF THE CORRUGATED PIPE. RISER PIPE SHALL BE WRAPPED WITH 1/2 TO 1/4 INCH HARDWARE CLOTH WIRE AND WRAPPED WITH GEOTEXTILE FABRIC (MIRAFI 140N OR APPROVED EQUAL). SECURE HARDWARE CLOTH WIRE AND GEOTEXTILE FABRIC TO RISER PIPE WITH STAINLESS STEEL BANDS AT TOP AND BOTTOM.
3. ALL AREA UNDER EMBANKMENT SHALL BE CLEARED, GRUBBED AND STRIPPED OF ANY VEGETATION AND ROOT MAT. THE POOL AREA SHALL BE CLEARED.
4. ALL FILL MATERIAL FOR THE EMBANKMENT SHALL BE FREE FROM ROOTS OR OTHER WOODY VEGETATION AS WELL AS OVER-SIZED STONE, ROCKS, ORGANIC MATERIAL OR OTHER OBJECTIONABLE MATERIAL. THE EMBANKMENT SHALL BE COMPACTED BY TRAVERSING WITH EQUIPMENT WHILE IT IS BEING CONSTRUCTED, MAXIMUM HEIGHT OF EMBANKMENT SHALL BE 5' MEASURED AT CENTERLINE OF EMBANKMENT.
5. FILTER CLOTH SHALL BE PLACED OVER THE BOTTOM AND SIDES OF THE OUTLET CHANNEL PRIOR TO PLACEMENT OF STONE. SECTIONS OF FABRIC MUST OVERLAP AT LEAST ONE FOOT WITH SECTION NEAREST ENTRANCE PLACED ON TOP. FABRIC SHALL BE EMBEDDED AT LEAST SIX INCHES INTO EXISTING GROUND AT ENTRANCE OF OUTLET CHANNEL.
6. CONSTRUCT RIP-RAP APRON AT PIPE OUTLET USING NYSDOT ITEM NO. 620.03M AND A LAYER OF GEOTEXTILE FABRIC (MIRAFI 140 OR APPROVED EQUAL). REFER TO RIP-RAP APRON DETAIL ON SHEET G-12
7. SEDIMENT SHALL BE REMOVED AND TRAP RESTORED TO ITS ORIGINAL DIMENSIONS WHEN SEDIMENT HAS ACCUMULATED TO 1/2 THE HEIGHT OF THE RISER PIPE. REMOVED SEDIMENT SHALL BE DEPOSITED IN A SUITABLE AREA AND IN SUCH A MANNER THAT IT WILL NOT ERODE.
8. THE SEDIMENT TRAPS SHALL BE INSPECTED AFTER EACH RAIN EVENT AND REPAIRED AS NEEDED.
9. WATER FROM DEWATERING OPERATIONS SHALL BE DIVERTED OR TRANSPORTED TO A SEDIMENT TRAP BEFORE BEING DISCHARGED OFF-SITE. ALTERNATIVE TREATMENT METHODS SHALL BE APPROVED BY THE OWNER'S REPRESENTATIVE PRIOR TO IMPLEMENTATION.

F TEMPORARY PIPE OUTLET SEDIMENT TRAP DETAIL

NOT TO SCALE

THIS DRAWING WAS PREPARED AT THE SCALE INDICATED IN THE TITLE BLOCK. INACCURACIES IN THE STATED SCALE MAY BE INTRODUCED WHEN DRAWINGS ARE REPRODUCED BY ANY MEANS. USE THE GRAPHIC SCALE BAR IN THE TITLE BLOCK TO DETERMINE THE ACTUAL SCALE OF THIS DRAWING.

IT IS A VIOLATION OF LAW FOR ANY PERSON, UNLESS ACTING UNDER THE DIRECTION OF A LICENSED ENGINEER, TO ALTER THIS DOCUMENT.

STATE OF NEW YORK
MICHAEL BYRON LEE
087148
LICENSED PROFESSIONAL ENGINEER

NO.	DATE	
A	3/12/26	ISSUED FOR REGULATORY REVIEW
		DRAWING RELEASE

ESC DETAILS

MBL ENGINEERING, PLLC

NASCENTIA HEALTH INC.
7900 TURIN ROAD
CITY OF ROME
ONEIDA COUNTY

PROJECT # 22-067

DATE: MAY 2024

SHEET # C-501

SAVED: 9/15/26 4:01 PM

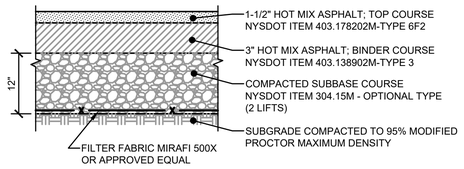

NORMAL DUTY ASPHALT CONCRETE PAVEMENT

A NOT TO SCALE

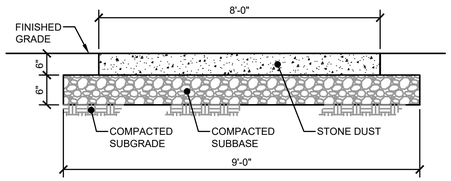

TYPICAL STONE DUST WALKING PATH

B NOT TO SCALE

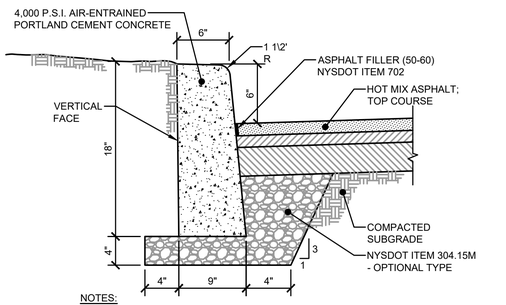

NOTES:

1. CURB SHALL BE CAST IN PLACE; NYSDOT ITEM 609.04 - TYPE B150.
2. EXPANSION JOINTS SHALL BE OF 1/2" PREMOLDED BITUMINOUS JOINT FILLER PLACED AT 12 FOOT INTERVALS, TO FULL DEPTH OF CURB. UPON REMOVAL OF FORMS AND/OR FINAL FINISHING, ALL CONCRETE TO BE SPRAYED WITH WHITE - PIGMENTIC MEMBRANE CURING COMPOUND.

TYPICAL SECTION

SITE CURBING DETAILS

C NOT TO SCALE

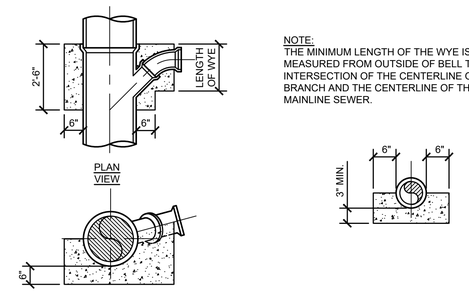

NOTE:
THE MINIMUM LENGTH OF THE WYE IS 1'-5" MEASURED FROM OUTSIDE OF BELL TO THE INTERSECTION OF THE CENTERLINE OF THE BRANCH AND THE CENTERLINE OF THE MAINLINE SEWER.

RISER - CROSS SECTION

NOTE:

1. LATERALS TO VACANT LOTS WILL BE TERMINATED WITH THE PUBLIC SEWER PORTION, APPROXIMATELY 2' BEYOND THE CURB LINE AND CAPPED. PROVIDE 2"x4" PRESSURE TREATED LUMBER FROM PIPE CROWN TO WITHIN 6" OF GRADE FOR LOCATING.

TYPICAL LATERAL & RISER CONNECTION

D NOT TO SCALE

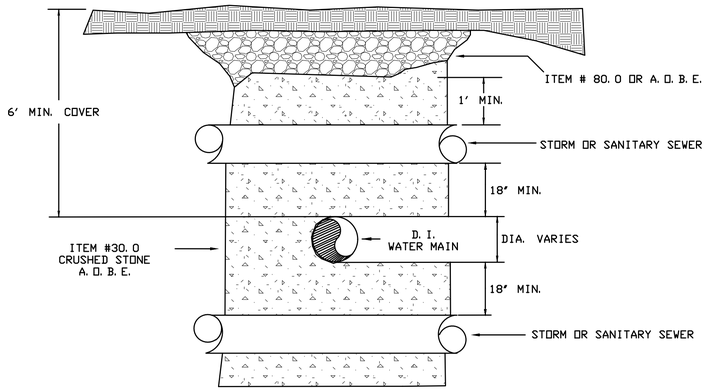

NOT TO SCALE

WATER/STORM OR SANITARY CROSSING

E NOT TO SCALE

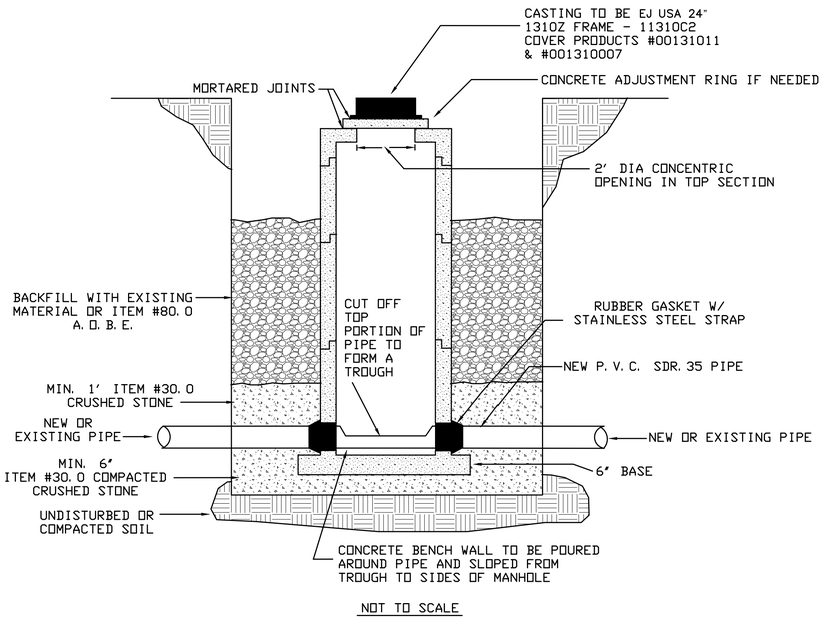

NOT TO SCALE

NEW PRECAST SANITARY MANHOLE 4' DIA. ITEM #193.0

F NOT TO SCALE

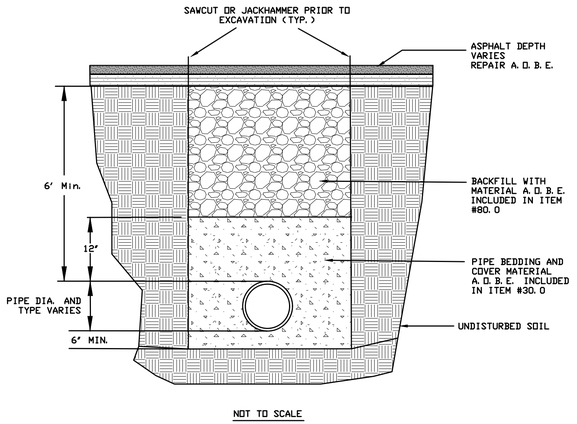

NOT TO SCALE

TRENCH AND BACKFILL DETAIL ITEM #15.0

G NOT TO SCALE

NO.	DATE	
A	3/12/26	ISSUED FOR REGULATORY REVIEW
		DRAWING RELEASE

MISCELLANEOUS DETAILS

MBL ENGINEERING, PLLC

NASCENTIA HEALTH INC.
7900 TURIN ROAD
CITY OF ROME
ONEIDA COUNTY

PROJECT # 22-067

DATE: MAY 2024

SHEET # C-502

THIS DRAWING WAS PREPARED AT THE SCALE INDICATED IN THE TITLE BLOCK. INACCURACIES IN THE STATED SCALE MAY BE INTRODUCED WHEN DRAWINGS ARE REPRODUCED BY ANY MEANS. USE THE GRAPHIC SCALE BAR IN THE TITLE BLOCK TO DETERMINE THE ACTUAL SCALE OF THIS DRAWING.

IT IS A VIOLATION OF LAW FOR ANY PERSON, UNLESS ACTING UNDER THE DIRECTION OF A LICENSED ENGINEER, TO ALTER THIS DOCUMENT.

STATE OF NEW YORK
MICHAEL BYRON LAMB
090071148
LICENSED PROFESSIONAL ENGINEER

SAVED: 9/15/26 4:01 PM

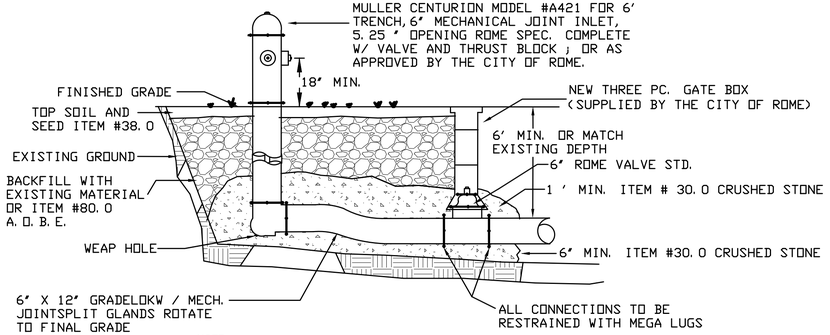

NOTE:

1. HYDRANT TO BE PAINTED RED, WHITE, & BLUE WITH ROME THREAD ON THE CONNECTIONS.

A NEW HYDRANT COMPLETE WITH 6" VALVE AND GRADELOK ITEM #50.0

NOT TO SCALE

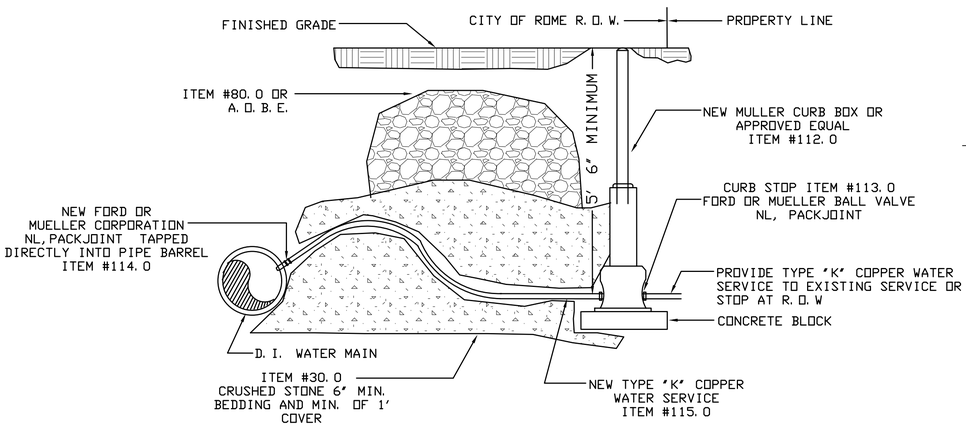

B NEW COPPER WATER SERVICE CONNECTION ITEM #112.0, #113.0, #114.0, #115.0

NOT TO SCALE

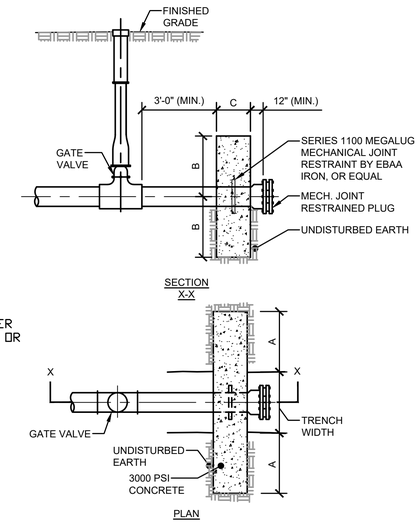

PIPE SIZE	DIMENSION SCHEDULE		
	A	B	C
8"	3'-0"	1'-6"	1'-0"

C DEAD END DETAIL

NOT TO SCALE

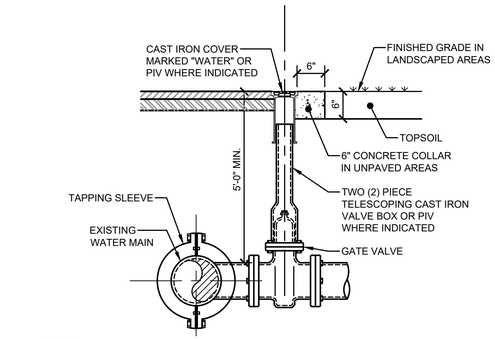

NOTES:

1. TAP OF PUBLIC WATER MAINS SHALL BE PERFORMED UNDER THE SUPERVISION OF THE ENGINEER AND THE AUTHORITY HAVING JURISDICTION.
2. TAPPING SLEEVE SHALL BE SELECTED TO FIT EXISTING PIPE OUTSIDE DIAMETERS.

D TAPPING SLEEVE AND VALVE DETAIL

NOT TO SCALE

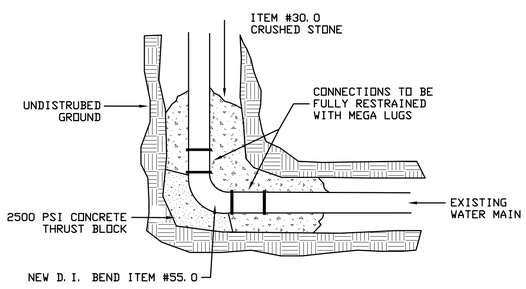

REFER TO THRUST BLOCK CHART FOR DIMENSIONS

E 11.25° - 90° DIRECTIONAL CHANGE

NOT TO SCALE

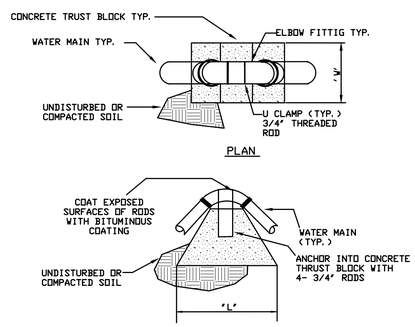

DIMENSION SCHEDULE (VERTICAL BENDS)						
PIPE SIZE	45 DEGREE BEND		22.5 DEGREE BEND		11.25 DEGREE BEND	
	'H'	'L'	'H'	'L'	'H'	'L'
6"	3'-6"	5'-0"	3'-0"	4'-0"	2'-6"	3'-0"
8"	4'-6"	5'-0"	3'-6"	4'-0"	3'-0"	3'-0"

F VERTICAL BENDS THRUST BLOCK DETAIL

NOT TO SCALE

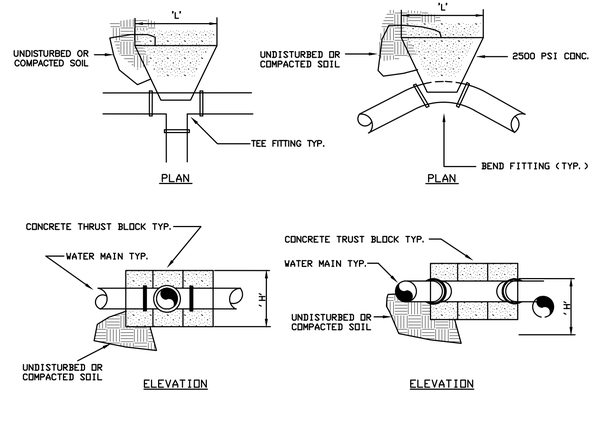

DIMENSION SCHEDULE								
PIPE SIZE	90 DEGREE BEND		45 DEGREE BEND		22.5 DEGREE BEND		11.25 DEGREE BEND	
	'H'	'L'	'H'	'L'	'H'	'L'	'H'	'L'
6"	4'-0"	4'-6"	3'-0"	3'-6"	2'-0"	3'-0"	1'-6"	1'-6"
8"	5'-0"	5'-0"	3'-6"	4'-0"	2'-6"	3'-0"	2'-0"	2'-0"

G HORIZONTAL BENDS THRUST BLOCK DETAIL

NOT TO SCALE

THIS DRAWING WAS PREPARED AT THE SCALE INDICATED IN THE TITLE BLOCK. INACCURACIES IN THE STATED SCALE MAY BE INTRODUCED WHEN DRAWINGS ARE REPRODUCED BY ANY MEANS. USE THE GRAPHIC SCALE BAR IN THE TITLE BLOCK TO DETERMINE THE ACTUAL SCALE OF THIS DRAWING.

IT IS A VIOLATION OF LAW FOR ANY PERSON, UNLESS ACTING UNDER THE DIRECTION OF A LICENSED ENGINEER, TO ALTER THIS DOCUMENT.



NO.	DATE	DRAWING RELEASE
A	3/12/26	ISSUED FOR REGULATORY REVIEW

WATER DETAILS

MBL ENGINEERING, PLLC

NASCENTIA HEALTH INC.
7900 TURIN ROAD
CITY OF ROME
ONEIDA COUNTY

PROJECT # 22-067

DATE: MAY 2024

SHEET # C-503

SAVED: 9/15/26 4:01 PM

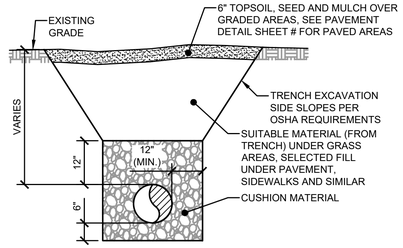

A STORM SEWER PIPE TRENCH/BACKFILL DETAIL

NOT TO SCALE

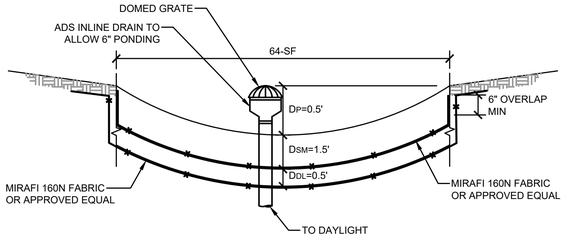

DP = PONDING DEPTH
DSM = SOIL MEDIA DEPTH; SOIL MIX SEE NOTE #2
DDL = DRAINAGE LAYER DEPTH (NO. 2 COURSE AGGREGATE MATERIAL)

NOTES:

1. SEE GRADING PLAN FOR RAIN GARDEN SURFACE AREA LIMITS.
2. RAIN GARDENS SHALL BE INITIALLY DUG OUT TO A 24" DEPTH, THEN BACKFILLED WITH 6" OF NO. 2 COURSE AGGREGATE MATERIAL THEN FILLED BACK TO THE RAIN GARDEN BED WITH AN APPROVED SOIL MIX USED TO CONSTRUCT RAIN GARDENS.
3. FOR RAIN GARDENS AND BIO-RETENTION BASINS USE PERMEABLE SOIL MEDIA MEETING BIO-RETENTION AND DRY SWALE SOIL AS SPECIFIED UNDER NYSDOT ITEM 208.0103 22 AND LABORATORY TESTING FOR SOIL PHOSPHOROUS CONCENTRATION UNDER ITEM 208.0104 22.
4. SEE DEC MANUAL FOR RAIN GARDEN PLANTINGS.
5. CONTRACTOR SHALL PROVIDE SHOP DRAWINGS FOR PROPOSED MATERIALS USED TO CONSTRUCT RAIN GARDENS.

B RAIN GARDEN SECTION

NOT TO SCALE

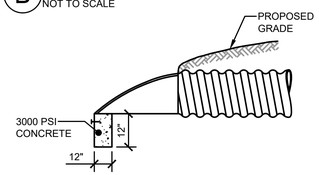

CROSS SECTION

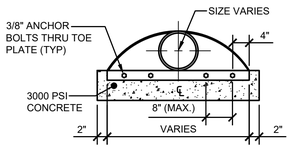

ELEVATION

NOTES:

1. GALVANIZED END SECTION SHALL BE ORDERED ONE SIZE LARGER THAN NOMINAL DIAMETER OF PIPE WHEN ATTACHING TO SICPP.
2. END SECTIONS TO BE INSTALLED ON ALL PROPOSED STORM SEWER INLETS AND OUTLETS.

E FLARED END SECTION

NOT TO SCALE

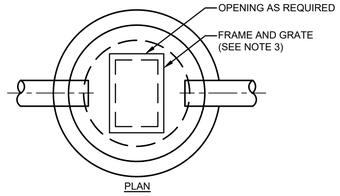

PLAN

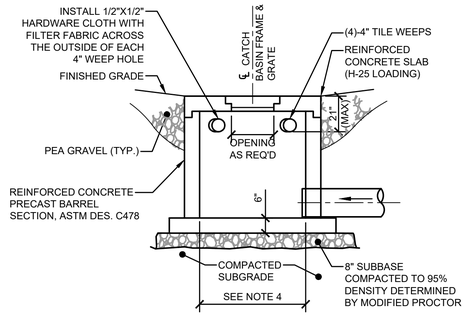

NOTES:

1. ALL CATCH BASIN STRUCTURES SHALL BE DESIGNED FOR H-25 LOADING.
2. PRIOR TO CONSTRUCTION, THE CONTRACTOR SHALL SUBMIT SHOP DRAWINGS OF ALL DRAINAGE STRUCTURES TO THE DIRECTOR'S REPRESENTATIVE FOR REVIEW.
3. FRAME AND GRATE SHALL BE NYSDOT #11 RETICULINE LOCKING TYPE WITH A CLEAR OPENING SIZE OF 23-15/16"x 32-1/2".
4. THE MINIMUM INSIDE DIAMETER OF CATCH BASINS SHALL BE 48-INCHES FOR 12" THROUGH 18" SEWERS, 60-INCHES FOR 21" THROUGH 30" SEWERS, AND 72-INCHES FOR 33" THROUGH 42" SEWERS.
5. ALL CONNECTIONS SHALL HAVE FLEXIBLE CONNECTION AS SPECIFIED.

C CATCH BASIN DETAIL

NOT TO SCALE

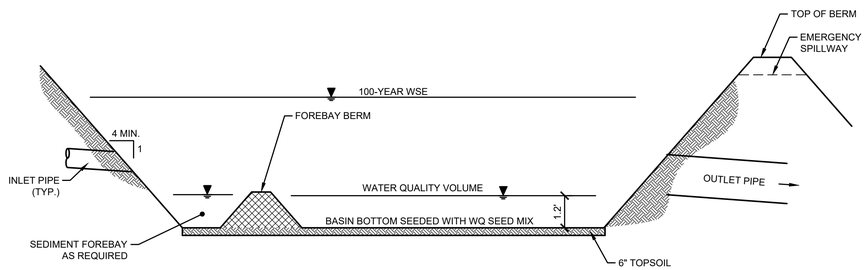

F INFILTRATION BASIN SECTION

NOT TO SCALE

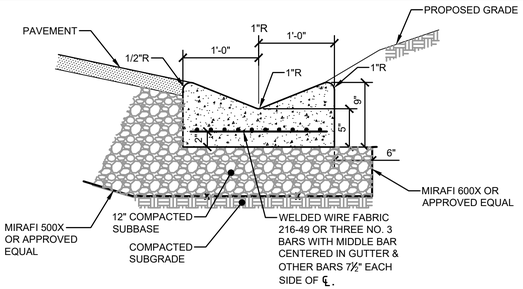

C CONCRETE VALLEY GUTTER DETAIL

NOT TO SCALE

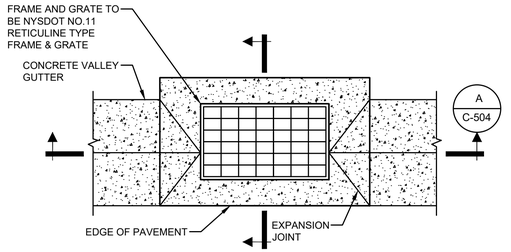

PLAN

NOTES:

1. CONCRETE SHALL BE 4000 P.S.I. (MIN.) AIR ENTRAINED CONCRETE.
2. FULL DEPTH EXPANSION JOINTS SHALL BE PROVIDED EVERY 25', AND MARKED JOINTS SHALL BE AT 5' SPACING AND FORCED BY A GROOVING TOOL.
3. ALL EXPANSION JOINTS SHALL BE FILLED WITH ASPHALT FILLER MATERIAL.
4. CONCRETE SURFACE SHALL BE BROOM FINISHED PERPENDICULAR TO THE DIRECTION OF TRAVEL.

D REINFORCED CONCRETE CATCH BASIN APRON

NOT TO SCALE

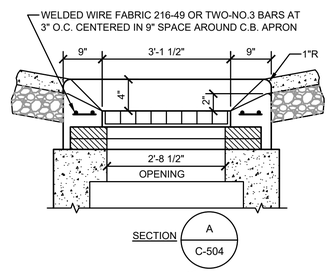

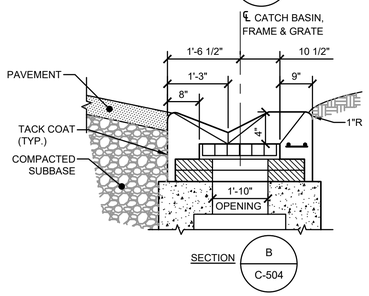

G REINFORCED CONCRETE CATCH BASIN APRON SECTIONS

NOT TO SCALE

THIS DRAWING WAS PREPARED AT THE SCALE INDICATED IN THE TITLE BLOCK. INACCURACIES IN THE STATED SCALE MAY BE INTRODUCED WHEN DRAWINGS ARE REPRODUCED BY ANY MEANS. USE THE GRAPHIC SCALE BAR IN THE TITLE BLOCK TO DETERMINE THE ACTUAL SCALE OF THIS DRAWING.

IT IS A VIOLATION OF LAW FOR ANY PERSON, UNLESS ACTING UNDER THE DIRECTION OF A LICENSED ENGINEER, TO ALTER THIS DOCUMENT.



NO.	DATE	DRAWING RELEASE
A	3/12/26	ISSUED FOR REGULATORY REVIEW

STORMWATER DETAILS

MBL ENGINEERING, PLLC

NASCENTIA HEALTH INC.
7900 TURIN ROAD
CITY OF ROME
ONEIDA COUNTY

PROJECT # 22-067

DATE: MAY 2024

SHEET # C-504