BONACIO
Construction

October 8, 2026

Garret S. Wyckoff, Planner
Community & Economic Development
City of Rome
198 N Washington Street
Rome, New York 13440

Re: Request for Site Plan Revision Approval, 147 Hangar Road, Rome, NY 13441

Dear Mr. Wyckoff:

On behalf of the owner, Hangar Road 2, LLC, Bonacio Construction respectfully requests that the Planning Board consider a revision to the approved site plan for the above-referenced project at its November meeting.

The enclosed revised plans prepared by The LA Group show the following changes:

1. Expanded Patio: The patio on the west side of the building has been enlarged.
2. New Sidewalk: A new sidewalk provides access to the service door added on the south elevation.
3. Generator Change: The previously approved natural gas-fired 300 kW generator is replaced by two diesel-fired 750 kW generators with integrated fuel storage. This was a tenant request to meet an internal requirement for whole building power backup.
4. Optional Entry Sign: The plans show an optional location for a tenant entry sign at the eastern curb cut off Hangar Road. The tenant will submit a sign application separately.

Enclosed are the revised plan sheets:

- C-200, Layout and Materials Plan dated 10/8/26
- C-300, Grading and Drainage Plan dated 10/8/26
- C-500, Landscape Plan dated 10/8/26

I have also enclosed the generator specifications, including information about its enclosure and integrated fuel storage, for your use in this review.

Please let me know if you need anything further. Thank you for your assistance.

Respectfully,

Mike Gestwick
Bonacio Construction

cc: Amber Mathias, Bonacio Development
Matt Brobston, The LA Group

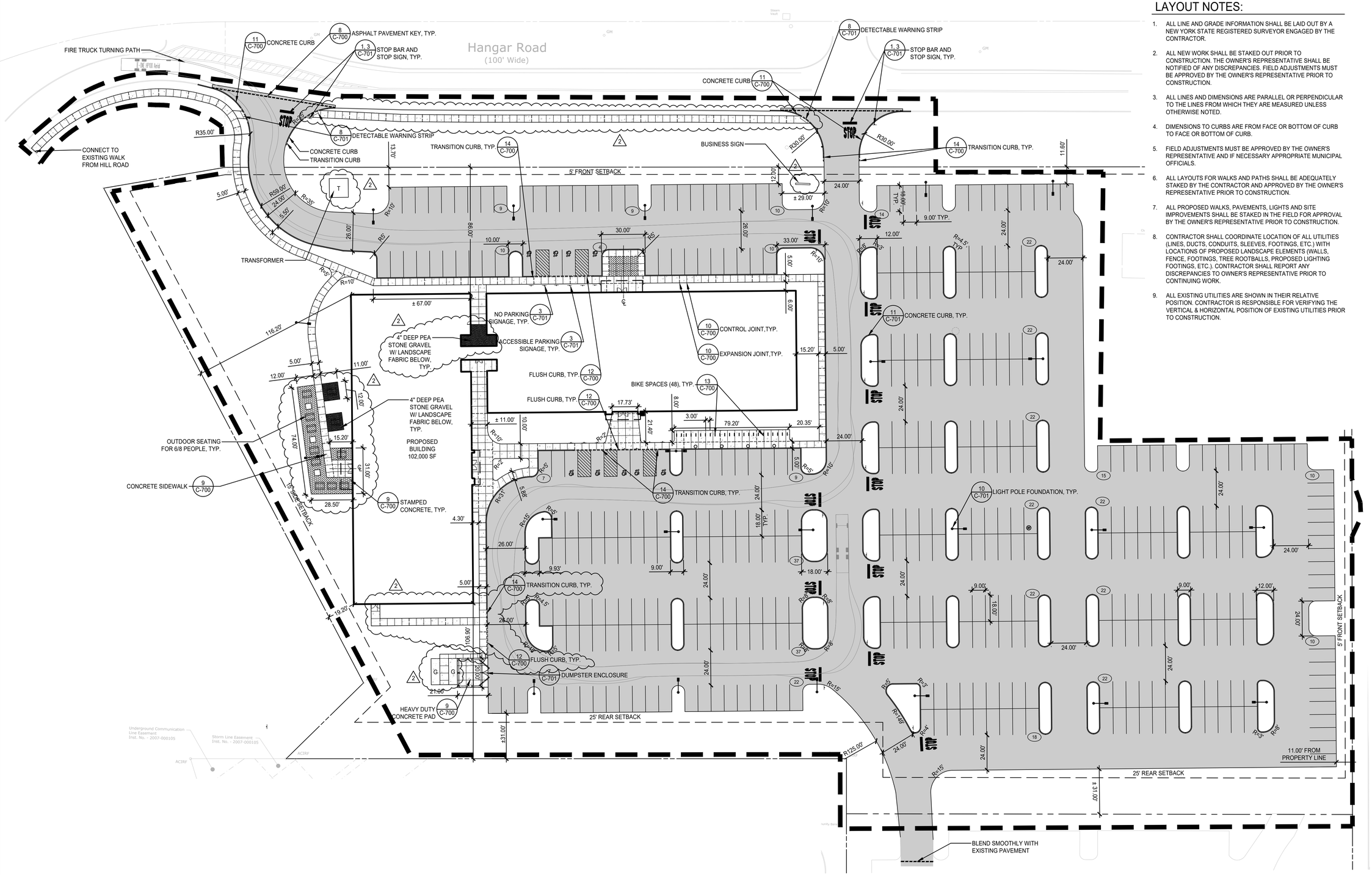

LAYOUT NOTES:

1. ALL LINE AND GRADE INFORMATION SHALL BE LAID OUT BY A NEW YORK STATE REGISTERED SURVEYOR ENGAGED BY THE CONTRACTOR.
2. ALL NEW WORK SHALL BE STAKED OUT PRIOR TO CONSTRUCTION. THE OWNER'S REPRESENTATIVE SHALL BE NOTIFIED OF ANY DISCREPANCIES. FIELD ADJUSTMENTS MUST BE APPROVED BY THE OWNER'S REPRESENTATIVE PRIOR TO CONSTRUCTION.
3. ALL LINES AND DIMENSIONS ARE PARALLEL OR PERPENDICULAR TO THE LINES FROM WHICH THEY ARE MEASURED UNLESS OTHERWISE NOTED.
4. DIMENSIONS TO CURBS ARE FROM FACE OR BOTTOM OF CURB TO FACE OR BOTTOM OF CURB.
5. FIELD ADJUSTMENTS MUST BE APPROVED BY THE OWNER'S REPRESENTATIVE AND IF NECESSARY APPROPRIATE MUNICIPAL OFFICIALS.
6. ALL LAYOUTS FOR WALKS AND PATHS SHALL BE ADEQUATELY STAKED BY THE CONTRACTOR AND APPROVED BY THE OWNER'S REPRESENTATIVE PRIOR TO CONSTRUCTION.
7. ALL PROPOSED WALKS, PAVEMENTS, LIGHTS AND SITE IMPROVEMENTS SHALL BE STAKED IN THE FIELD FOR APPROVAL BY THE OWNER'S REPRESENTATIVE PRIOR TO CONSTRUCTION.
8. CONTRACTOR SHALL COORDINATE LOCATION OF ALL UTILITIES (LINES, DUCTS, CONDUITS, SLEEVES, FOOTINGS, ETC.) WITH LOCATIONS OF PROPOSED LANDSCAPE ELEMENTS (WALLS, FENCE, FOOTINGS, TREE ROOTBALLS, PROPOSED LIGHTING FOOTINGS, ETC.). CONTRACTOR SHALL REPORT ANY DISCREPANCIES TO OWNER'S REPRESENTATIVE PRIOR TO CONTINUING WORK.
9. ALL EXISTING UTILITIES ARE SHOWN IN THEIR RELATIVE POSITION. CONTRACTOR IS RESPONSIBLE FOR VERIFYING THE VERTICAL & HORIZONTAL POSITION OF EXISTING UTILITIES PRIOR TO CONSTRUCTION.

LEGEND

- LIMIT OF WORK LINE
- PROPERTY LINE
- ASPHALT PAVEMENT
- CONCRETE PAVEMENT
- CURB
- FLUSH CURB
- TRANSITION CURB

Scale: 1" = 30'

The LA GROUP
Landscape Architecture & Engineering P.C.
People. Purpose. Place.
40 Long Alley
Saratoga Springs
NY 12866
p: 518-587-8100
f: 518-587-0180
www.thelagroup.com

Unauthorized alteration or addition to this document is a violation of Section 7209 of the New York State Education Law.

© the LA Group 2017

Prepared for:

Hangar Road
Rome, LLC
18 Division Street Suite 401
Saratoga Springs, NY 12866

Project Title:

Hangar Road
Office Building 2
212 Hangar Road
Rome, NY 13441

Project No.:			2025079
Design:			MCB
Drawn:	MLD	Ch'k'd:	MCB
Date:	02/10/26	Scale:	1"=30'

Rev:	Description:	Date:
1	REVISED PER COMMENTS	12/30/2025
2	SITE PLAN AMENDMENT	9/9/2026
3	SITE PLAN AMENDMENT	10/8/2026

Drawing Title

LAYOUT AND MATERIALS PLAN

Drawing No.

C-200

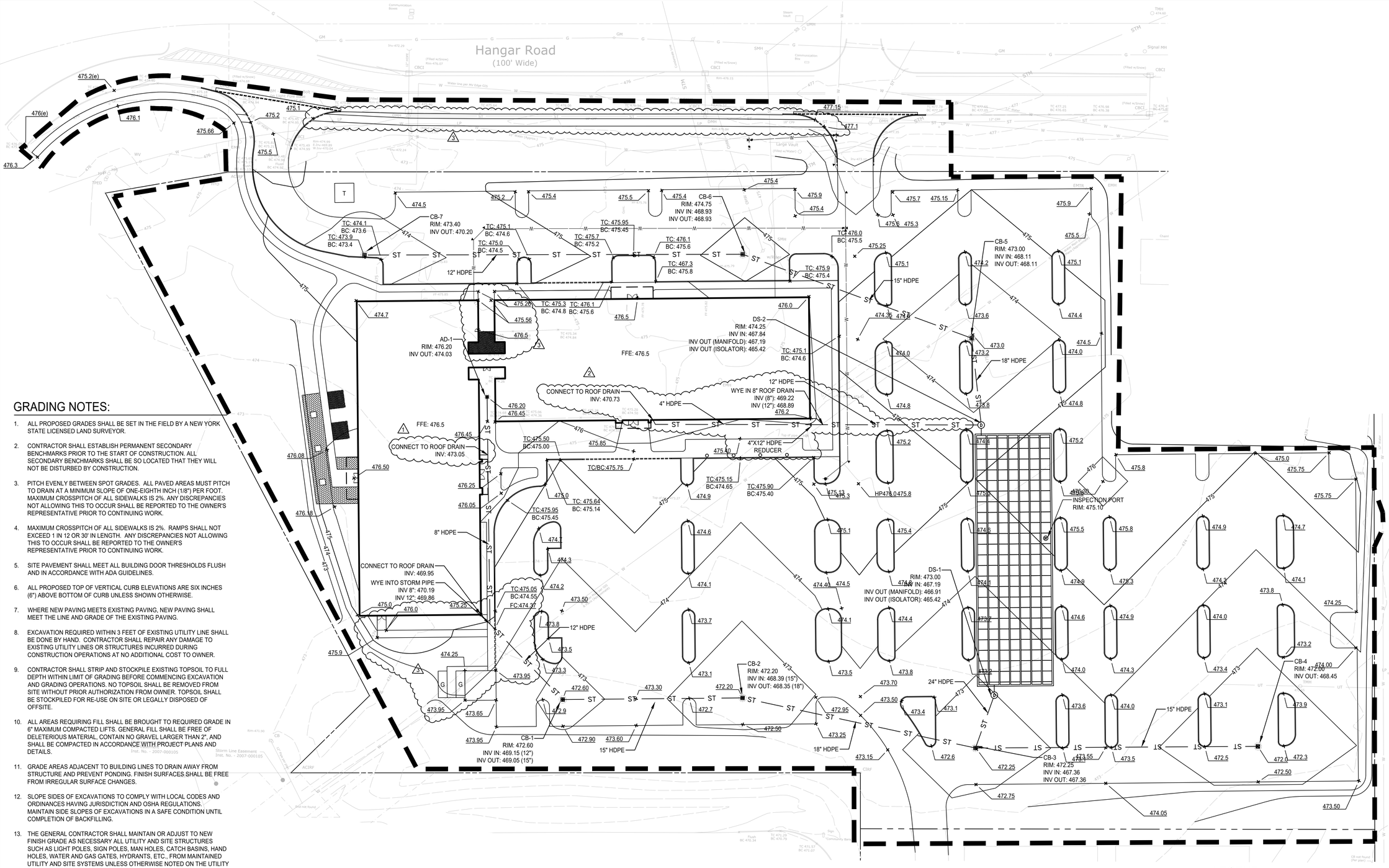

GRADING NOTES:

1. ALL PROPOSED GRADES SHALL BE SET IN THE FIELD BY A NEW YORK STATE LICENSED LAND SURVEYOR.
2. CONTRACTOR SHALL ESTABLISH PERMANENT SECONDARY BENCHMARKS PRIOR TO THE START OF CONSTRUCTION. ALL SECONDARY BENCHMARKS SHALL BE SO LOCATED THAT THEY WILL NOT BE DISTURBED BY CONSTRUCTION.
3. PITCH EVENLY BETWEEN SPOT GRADES. ALL PAVED AREAS MUST PITCH TO DRAIN AT A MINIMUM SLOPE OF ONE-EIGHTH INCH (1/8") PER FOOT. MAXIMUM CROSSPITCH OF ALL SIDEWALKS IS 2%. ANY DISCREPANCIES NOT ALLOWING THIS TO OCCUR SHALL BE REPORTED TO THE OWNER'S REPRESENTATIVE PRIOR TO CONTINUING WORK.
4. MAXIMUM CROSSPITCH OF ALL SIDEWALKS IS 2%. RAMPS SHALL NOT EXCEED 1 IN 12 OR 30' IN LENGTH. ANY DISCREPANCIES NOT ALLOWING THIS TO OCCUR SHALL BE REPORTED TO THE OWNER'S REPRESENTATIVE PRIOR TO CONTINUING WORK.
5. SITE PAVEMENT SHALL MEET ALL BUILDING DOOR THRESHOLDS FLUSH AND IN ACCORDANCE WITH ADA GUIDELINES.
6. ALL PROPOSED TOP OF VERTICAL CURB ELEVATIONS ARE SIX INCHES (6") ABOVE BOTTOM OF CURB UNLESS SHOWN OTHERWISE.
7. WHERE NEW PAVING MEETS EXISTING PAVING, NEW PAVING SHALL MEET THE LINE AND GRADE OF THE EXISTING PAVING.
8. EXCAVATION REQUIRED WITHIN 3 FEET OF EXISTING UTILITY LINE SHALL BE DONE BY HAND. CONTRACTOR SHALL REPAIR ANY DAMAGE TO EXISTING UTILITY LINES OR STRUCTURES INCURRED DURING CONSTRUCTION OPERATIONS AT NO ADDITIONAL COST TO OWNER.
9. CONTRACTOR SHALL STRIP AND STOCKPILE EXISTING TOPSOIL TO FULL DEPTH WITHIN LIMIT OF GRADING BEFORE COMMENCING EXCAVATION AND GRADING OPERATIONS. NO TOPSOIL SHALL BE REMOVED FROM SITE WITHOUT PRIOR AUTHORIZATION FROM OWNER. TOPSOIL SHALL BE STOCKPILED FOR RE-USE ON SITE OR LEGALLY DISPOSED OF OFFSITE.
10. ALL AREAS REQUIRING FILL SHALL BE BROUGHT TO REQUIRED GRADE IN 6" MAXIMUM COMPACTED LIFTS. GENERAL FILL SHALL BE FREE OF DELETERIOUS MATERIAL, CONTAIN NO GRAVEL LARGER THAN 2", AND SHALL BE COMPACTED IN ACCORDANCE WITH PROJECT PLANS AND DETAILS.
11. GRADE AREAS ADJACENT TO BUILDING LINES TO DRAIN AWAY FROM STRUCTURE AND PREVENT PONDING. FINISH SURFACES SHALL BE FREE FROM IRREGULAR SURFACE CHANGES.
12. SLOPE SIDES OF EXCAVATIONS TO COMPLY WITH LOCAL CODES AND ORDINANCES HAVING JURISDICTION AND OSHA REGULATIONS. MAINTAIN SIDE SLOPES OF EXCAVATIONS IN A SAFE CONDITION UNTIL COMPLETION OF BACKFILLING.
13. THE GENERAL CONTRACTOR SHALL MAINTAIN OR ADJUST TO NEW FINISH GRADE AS NECESSARY ALL UTILITY AND SITE STRUCTURES SUCH AS LIGHT POLES, SIGN POLES, MAN HOLES, CATCH BASINS, HAND HOLES, WATER AND GAS GATES, HYDRANTS, ETC., FROM MAINTAINED UTILITY AND SITE SYSTEMS UNLESS OTHERWISE NOTED ON THE UTILITY DRAWINGS OR AS DIRECTED BY THE OWNER'S REPRESENTATIVE.
14. CONTRACTOR SHALL BLEND NEW EARTHWORK SMOOTHLY INTO EXISTING, PROVIDING VERTICAL CURVES OR ROUNDINGS AT ALL TOP AND BOTTOM OF SLOPES.
15. CONTRACTOR SHALL MAINTAIN THE INTEGRITY OF THE EXISTING DRAINAGE SYSTEM AT ALL TIMES. DURING EARTHWORK OPERATIONS, DRAINAGE OF THE SITE AND ADJACENT AREAS SHALL BE MAINTAINED CONTINUOUSLY TO PREVENT EROSION OR DAMAGE RESULTING FROM CONCENTRATED RUN-OFF. WHEN IT IS NECESSARY TO INTERRUPT THE EXISTING DRAINAGE PATTERNS AND/OR UTILITIES, PROVIDE TEMPORARY FACILITIES UNTIL WORK IS PERMANENTLY STABILIZED AND APPROVED BY OWNER'S REPRESENTATIVE.
16. IN ALL LAWN AREAS, ROUGH GRADE SHALL BE BROUGHT TO WITHIN 4" OF FINISHED GRADE UNLESS OTHERWISE NOTED.
17. THE SIDES OF ANY NEW CUT AND/OR FILL SLOPES SHALL BE CONSTRUCTED W/ SLOPES NO STEEPER THAN 1 FOOT (VERTICAL) ON 2 FOOT (HORIZONTAL).

LEGEND

- LIMIT OF WORK LINE
- PROPERTY LINE
- 247 — PROPOSED CONTOUR LINE
- 247 — EXISTING CONTOUR LINE
- ST — PROPOSED STORM PIPE
- TC — TOP OF CURB
- BC — BOTTOM OF CURB
- 709.5 — PROPOSED SPOT ELEVATION

30 0 10 20 30
Scale: 1" = 30'

The LA GROUP
Landscape Architecture & Engineering P.C.
People. Purpose. Place.
40 Long Alley
Saratoga Springs
NY 12866
p: 518-587-8100
f: 518-587-0180
www.thelagroup.com

Unauthorized alteration or addition to this document is a violation of Section 7209 of the New York State Education Law.

© the LA Group 2017

Prepared for:

Hangar Road Rome, LLC
18 Division Street Suite 401
Saratoga Springs, NY 12866

Project Title:

Hangar Road Office Building 2
212 Hangar Road
Rome, NY 13441

Project No.:			2025079
Design:			MCB
Drawn:	MLD	Ch'k'd:	MCB
Date:	02/10/26	Scale:	1"=30'

Rev:	Description:	Date:
1	PLAN COORDINATION	5/4/2026
2	RFI #79	9/8/2026
3	SITE PLAN AMENDMENT	9/9/2026
4	ISLAND SPOT GRADES	9/18/2026
5	SITE PLAN AMENDMENT	10/8/2026

Drawing Title

GRADING AND DRAINAGE PLAN

Drawing No.

C-300

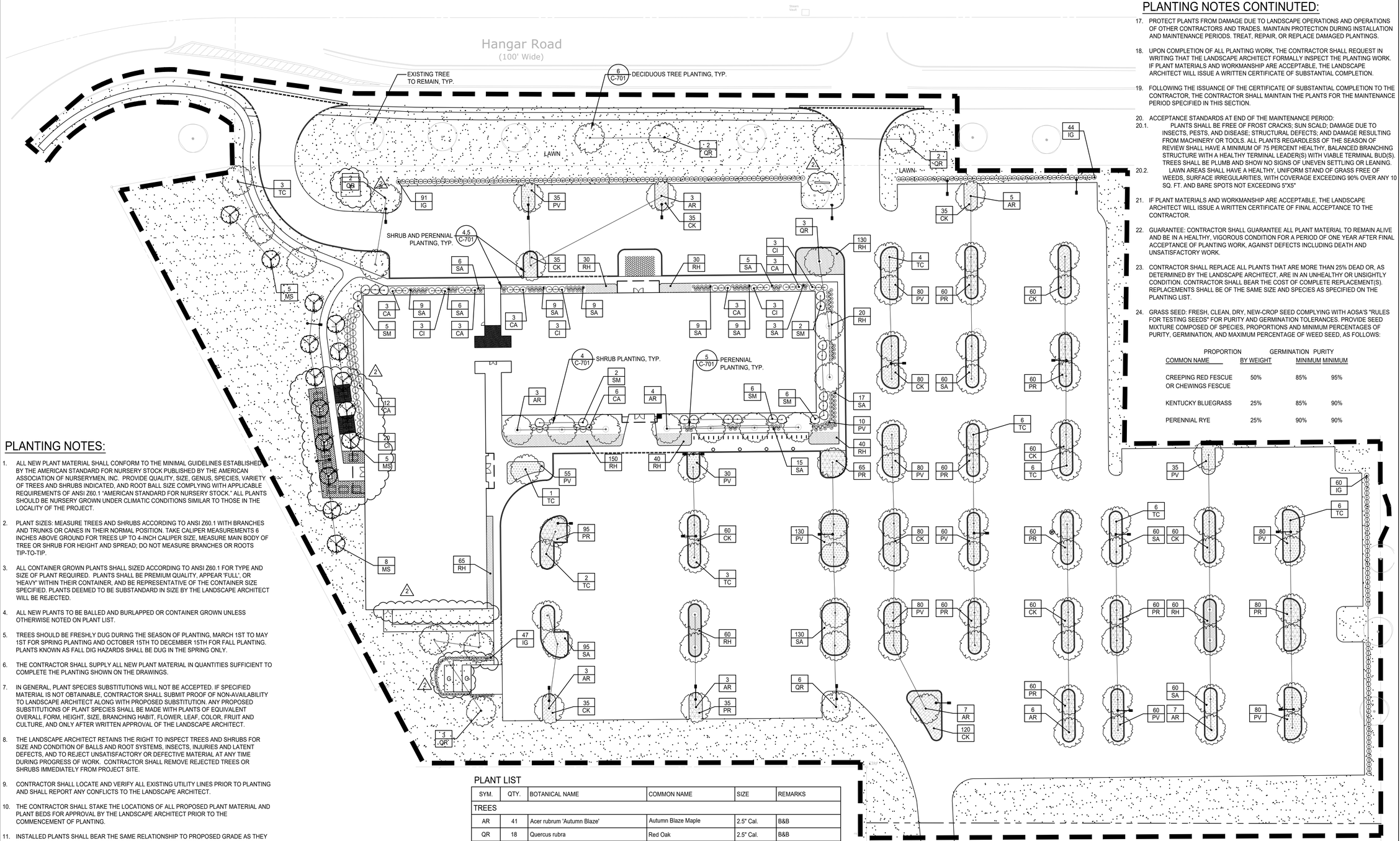

PLANTING NOTES:

1. ALL NEW PLANT MATERIAL SHALL CONFORM TO THE MINIMAL GUIDELINES ESTABLISHED BY THE AMERICAN STANDARD FOR NURSERY STOCK PUBLISHED BY THE AMERICAN ASSOCIATION OF NURSERYMEN, INC. PROVIDE QUALITY, SIZE, GENUS, SPECIES, VARIETY OF TREES AND SHRUBS INDICATED, AND ROOT BALL SIZE COMPLYING WITH APPLICABLE REQUIREMENTS OF ANSI Z60.1 "AMERICAN STANDARD FOR NURSERY STOCK." ALL PLANTS SHOULD BE NURSERY GROWN UNDER CLIMATIC CONDITIONS SIMILAR TO THOSE IN THE LOCALITY OF THE PROJECT.
2. PLANT SIZES: MEASURE TREES AND SHRUBS ACCORDING TO ANSI Z60.1 WITH BRANCHES AND TRUNKS OR CANES IN THEIR NORMAL POSITION. TAKE CALIPER MEASUREMENTS 6 INCHES ABOVE GROUND FOR TREES UP TO 4-INCH CALIPER SIZE, MEASURE MAIN BODY OF TREE OR SHRUB FOR HEIGHT AND SPREAD; DO NOT MEASURE BRANCHES OR ROOTS TIP-TO-TIP.
3. ALL CONTAINER GROWN PLANTS SHALL SIZED ACCORDING TO ANSI Z60.1 FOR TYPE AND SIZE OF PLANT REQUIRED. PLANTS SHALL BE PREMIUM QUALITY, APPEAR 'FULL', OR 'HEAVY' WITHIN THEIR CONTAINER, AND BE REPRESENTATIVE OF THE CONTAINER SIZE SPECIFIED. PLANTS DEEMED TO BE SUBSTANDARD IN SIZE BY THE LANDSCAPE ARCHITECT WILL BE REJECTED.
4. ALL NEW PLANTS TO BE BALLED AND BURLAPPED OR CONTAINER GROWN UNLESS OTHERWISE NOTED ON PLANT LIST.
5. TREES SHOULD BE FRESHLY DUG DURING THE SEASON OF PLANTING, MARCH 1ST TO MAY 1ST FOR SPRING PLANTING AND OCTOBER 15TH TO DECEMBER 15TH FOR FALL PLANTING. PLANTS KNOWN AS FALL DIG HAZARDS SHALL BE DUG IN THE SPRING ONLY.
6. THE CONTRACTOR SHALL SUPPLY ALL NEW PLANT MATERIAL IN QUANTITIES SUFFICIENT TO COMPLETE THE PLANTING SHOWN ON THE DRAWINGS.
7. IN GENERAL, PLANT SPECIES SUBSTITUTIONS WILL NOT BE ACCEPTED. IF SPECIFIED MATERIAL IS NOT OBTAINABLE, CONTRACTOR SHALL SUBMIT PROOF OF NON-AVAILABILITY TO LANDSCAPE ARCHITECT ALONG WITH PROPOSED SUBSTITUTION. ANY PROPOSED SUBSTITUTIONS OF PLANT SPECIES SHALL BE MADE WITH PLANTS OF EQUIVALENT OVERALL FORM, HEIGHT, SIZE, BRANCHING HABIT, FLOWER, LEAF, COLOR, FRUIT AND CULTURE, AND ONLY AFTER WRITTEN APPROVAL OF THE LANDSCAPE ARCHITECT.
8. THE LANDSCAPE ARCHITECT RETAINS THE RIGHT TO INSPECT TREES AND SHRUBS FOR SIZE AND CONDITION OF BALLS AND ROOT SYSTEMS, INSECTS, INJURIES AND LATENT DEFECTS, AND TO REJECT UNSATISFACTORY OR DEFECTIVE MATERIAL AT ANY TIME DURING PROGRESS OF WORK. CONTRACTOR SHALL REMOVE REJECTED TREES OR SHRUBS IMMEDIATELY FROM PROJECT SITE.
9. CONTRACTOR SHALL LOCATE AND VERIFY ALL EXISTING UTILITY LINES PRIOR TO PLANTING AND SHALL REPORT ANY CONFLICTS TO THE LANDSCAPE ARCHITECT.
10. THE CONTRACTOR SHALL STAKE THE LOCATIONS OF ALL PROPOSED PLANT MATERIAL AND PLANT BEDS FOR APPROVAL BY THE LANDSCAPE ARCHITECT PRIOR TO THE COMMENCEMENT OF PLANTING.
11. INSTALLED PLANTS SHALL BEAR THE SAME RELATIONSHIP TO PROPOSED GRADE AS THEY BORE TO PREVIOUS GRADE. NO TREES SHALL BE PLANTED BEFORE ACCEPTANCE OF ROUGH GRADING.
12. CONTRACTOR SHALL PROVIDE LONG LASTING, SLOW RELEASE STARTER FERTILIZER IN EACH PLANTING PIT FOR TREES, SHRUBS AND PERENNIALS.
13. ALL PLANT BEDS SHALL RECEIVE THREE INCHES (3") OF SHREDDED BARK MULCH. MULCH SHALL BE FREE FROM DELETERIOUS MATERIALS AND SUITABLE AS A TOP DRESSING OF TREES AND SHRUBS, CONSISTING OF DOUBLE HAMMERED SHREDDED BARK MULCH COMPRISED OF EITHER HARDWOOD OR SOFTWOOD SHREDDED BARK. SHREDDED BARK MULCH SHALL NOT EXCEED 3" IN GREATEST DIMENSION, AND SHALL BE DARK BROWN IN COLOR.
14. PLANTS SHALL BE DELIVERED ONLY AS THEY CAN BE INSTALLED IN REASONABLE TIME. ALL PLANTS ARE SUBJECTED TO INSPECTION AT DELIVERY BY THE LANDSCAPE ARCHITECT / OWNER'S REPRESENTATIVE.
15. IF DISCREPANCIES EXIST BETWEEN THE NUMBER OF PLANTS DRAWN ON THE PLANTING PLAN AND THE NUMBER OF PLANTS IN THE PLANT LIST, THE PLANTING PLAN SHALL GOVERN.
16. MAINTENANCE SHALL BEGIN IMMEDIATELY AFTER EACH PLANT IS PLANTED AND SHALL CONTINUE FOR A MINIMUM 30-DAY MONITORING PERIOD AFTER NOTIFICATION OF SUBSTANTIAL COMPLETION, AND UNTIL FINAL ACCEPTANCE, WHICHEVER IS GREATER. MAINTENANCE INCLUDES PRUNING, WEEDING, WATERING, FERTILIZATION, AND RE-SEEDING AS NECESSARY.

PLANTING NOTES CONTINUTED:

17. PROTECT PLANTS FROM DAMAGE DUE TO LANDSCAPE OPERATIONS AND OPERATIONS OF OTHER CONTRACTORS AND TRADES. MAINTAIN PROTECTION DURING INSTALLATION AND MAINTENANCE PERIODS. TREAT, REPAIR, OR REPLACE DAMAGED PLANTINGS.
18. UPON COMPLETION OF ALL PLANTING WORK, THE CONTRACTOR SHALL REQUEST IN WRITING THAT THE LANDSCAPE ARCHITECT FORMALLY INSPECT THE PLANTING WORK. IF PLANT MATERIALS AND WORKMANSHIP ARE ACCEPTABLE, THE LANDSCAPE ARCHITECT WILL ISSUE A WRITTEN CERTIFICATE OF SUBSTANTIAL COMPLETION.
19. FOLLOWING THE ISSUANCE OF THE CERTIFICATE OF SUBSTANTIAL COMPLETION TO THE CONTRACTOR, THE CONTRACTOR SHALL MAINTAIN THE PLANTS FOR THE MAINTENANCE PERIOD SPECIFIED IN THIS SECTION.
20. ACCEPTANCE STANDARDS AT END OF THE MAINTENANCE PERIOD:
    20.1. PLANTS SHALL BE FREE OF FROST CRACKS; SUN SCALD; DAMAGE DUE TO INSECTS, PESTS, AND DISEASE; STRUCTURAL DEFECTS; AND DAMAGE RESULTING FROM MACHINERY OR TOOLS. ALL PLANTS REGARDLESS OF THE SEASON OF REVIEW SHALL HAVE A MINIMUM OF 75 PERCENT HEALTHY, BALANCED BRANCHING STRUCTURE WITH A HEALTHY TERMINAL LEADER(S) WITH VIABLE TERMINAL BUD(S). TREES SHALL BE PLUMB AND SHOW NO SIGNS OF UNEVEN SETTLING OR LEANING.
    20.2. LAWN AREAS SHALL HAVE A HEALTHY, UNIFORM STAND OF GRASS FREE OF WEEDS, SURFACE IRREGULARITIES, WITH COVERAGE EXCEEDING 90% OVER ANY 10 SQ. FT. AND BARE SPOTS NOT EXCEEDING 5"X5"
21. IF PLANT MATERIALS AND WORKMANSHIP ARE ACCEPTABLE, THE LANDSCAPE ARCHITECT WILL ISSUE A WRITTEN CERTIFICATE OF FINAL ACCEPTANCE TO THE CONTRACTOR.
22. GUARANTEE: CONTRACTOR SHALL GUARANTEE ALL PLANT MATERIAL TO REMAIN ALIVE AND BE IN A HEALTHY, VIGOROUS CONDITION FOR A PERIOD OF ONE YEAR AFTER FINAL ACCEPTANCE OF PLANTING WORK, AGAINST DEFECTS INCLUDING DEATH AND UNSATISFACTORY WORK.
23. CONTRACTOR SHALL REPLACE ALL PLANTS THAT ARE MORE THAN 25% DEAD OR, AS DETERMINED BY THE LANDSCAPE ARCHITECT, ARE IN AN UNHEALTHY OR UNSIGHTLY CONDITION. CONTRACTOR SHALL BEAR THE COST OF COMPLETE REPLACEMENT(S). REPLACEMENTS SHALL BE OF THE SAME SIZE AND SPECIES AS SPECIFIED ON THE PLANTING LIST.
24. GRASS SEED: FRESH, CLEAN, DRY, NEW-CROP SEED COMPLYING WITH AOSA'S "RULES FOR TESTING SEEDS" FOR PURITY AND GERMINATION TOLERANCES. PROVIDE SEED MIXTURE COMPOSED OF SPECIES, PROPORTIONS AND MINIMUM PERCENTAGES OF PURITY, GERMINATION, AND MAXIMUM PERCENTAGE OF WEED SEED, AS FOLLOWS:

COMMON NAME	PROPORTION BY WEIGHT	GERMINATION MINIMUM	PURITY MINIMUM
CREEPING RED FESCUE OR CHEWINGS FESCUE	50%	85%	95%
KENTUCKY BLUEGRASS	25%	85%	90%
PERENNIAL RYE	25%	90%	90%

PLANT LIST

SYM.	QTY.	BOTANICAL NAME	COMMON NAME	SIZE	REMARKS
TREES					
AR	41	Acer rubrum 'Autumn Blaze'	Autumn Blaze Maple	2.5" Cal.	B&B
QR	18	Quercus rubra	Red Oak	2.5" Cal.	B&B
TC	37	Tilia cordata 'Greenspire'	Greespire Little Leaf Linden	2.5" Cal.	B&B
MS	15	Malus 'Snowdrift'	Snowdrift Crabapple	2.5" Cal.	B&B
SHRUBS					
CI	32	Cornus alba 'Ivory Halo'	Red Twig Dogwood	#3 Cont.	18" MIN HT. @ INSTALL
CA	33	Ceanothus americanus	New Jersey Tea	18"-24" HT.	18" MIN HT. @ INSTALL
IG	242	Ilex glabra 'Shamrock'	Shamrock Inkberry	#3 Cont.	18" MIN HT. @ INSTALL
SM	21	Syringa patula 'Miss Kim'	Miss Kim Lilac	#3 Cont.	18" MIN HT. @ INSTALL
ORNAMENTAL GRASSES AND PERENNIALS					
CK	720	Calamagrostis X acutiflora 'Karl Foerster'	Karl Foerster Reed Grass	#2 Cont.	24" O.C.
PR	695	Panicum virgatum 'Ruby Ribbons'	Ruby Ribbons Switch Grass	#2 Cont.	24" O.C.
PV	805	Panicum virgatum	Switch Grass	#2 Cont.	24" O.C.
RH	625	Rudbeckia hirta	Black-eyed Susan	#2 Cont.	24" O.C.
SA	568	Sedum 'Autumn Joy'	Autumn Joy Sedum	#2 Cont.	24" O.C.

LEGEND

- LIMIT OF WORK LINE
- PROPERTY LINE
- LAWN SEED
- TREE
- SHRUB / PERENNIAL

Scale: 1" = 30'

The LA GROUP
Landscape Architecture & Engineering P.C.
People. Purpose. Place.
40 Long Alley
Saratoga Springs
NY 12866
p: 518-587-8100
f: 518-587-0180
www.thelagroup.com

Unauthorized alteration or addition to this document is a violation of Section 7209 of the New York State Education Law.

© the LA Group 2017

Prepared for:
Hangar Road Rome, LLC
18 Division Street Suite 401
Saratoga Springs, NY 12866

Project Title:
Hangar Road Office Building 2
212 Hangar Road
Rome, NY 13441

Project No.:			2025079
Design:			MCB
Drawn:	MLD	Ch'k'd:	MCB
Date:	02/10/26	Scale:	1"=30'

Rev:	Description:	Date:
1	REVISIONS PER COMMENTS	12/29/2025
2	SITE PLAN AMENDMENT	9/9/2026
3	SITE PLAN AMENDMENT	10/8/2026

Drawing Title
LANDSCAPE PLAN

Drawing No.
C-500

ATLANTIC
DETROIT DIESEL-ALLISON

Preliminary Generator Submittal



Project No.: 4000**
Rev.: 0
September 28, 2026

Project: METLIFE



ADDA Project Manager:

Kyle Cowing
Email: k.cowing@kirbycorp.com
Phone: (201) 249-3457



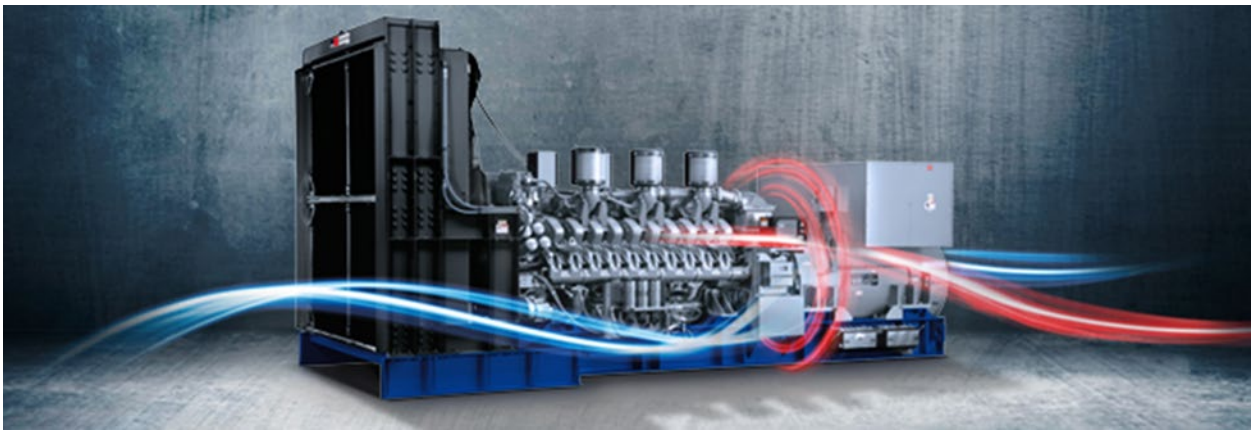

Atlas Copco

Authorized distributor

Atlantic Detroit Diesel
A Stewart & Stevenson Company
180 Route 17 South
Lodi, NJ 07644

mtu A Rolls-Royce solution

ATLANTIC
DETROIT DIESEL-ALLISON

4000**** – METLIFE Premlinary

MTU OE 750kW Diesel Generator in a Level 3 Enclosure with a 48 Hour/3030 Gallon Sub-Base Fuel Tank

Table of Contents:

Section 1:	**Bill of Material**
Section 2:	**750kW Genset Data Sheet**
Section 3:	**UL2200 Certificate**
Section 4:	**Generator Dimensional Prints**
Section 5:	**Generator Wiring Diagrams**
Section 6:	**EPA Certificate**
Section 7:	**Jacket Water Heater**
Section 8:	**Battery Data**
Section 9:	**Battery Charger**
Section 10:	**Air Filters**
Section 11:	**Fuel Water Separator**
Section 12:	**Sub-Base Fuel Tank**
Section 13:	**Unit Mounted Silencer**
Section 14:	**Alternator Data**
Section 15:	**Voltage Regulator**
Section 16:	**Control Panel**
Section 17:	**Remote E-Stop**
Section 18:	**ProtoNode**
Section 19:	**Remote Annunciator**
Section 20:	**Circuit Breaker Enclosure**
Section 21:	**ERMS Switch**
Section 22:	**Distribution Panel**
Section 23:	**Enclosure & Sound Data**
Section 24:	**Pad Isolators**
Section 25:	**Generator Warranty**
Section 26:	**Performance Assurance Certification**

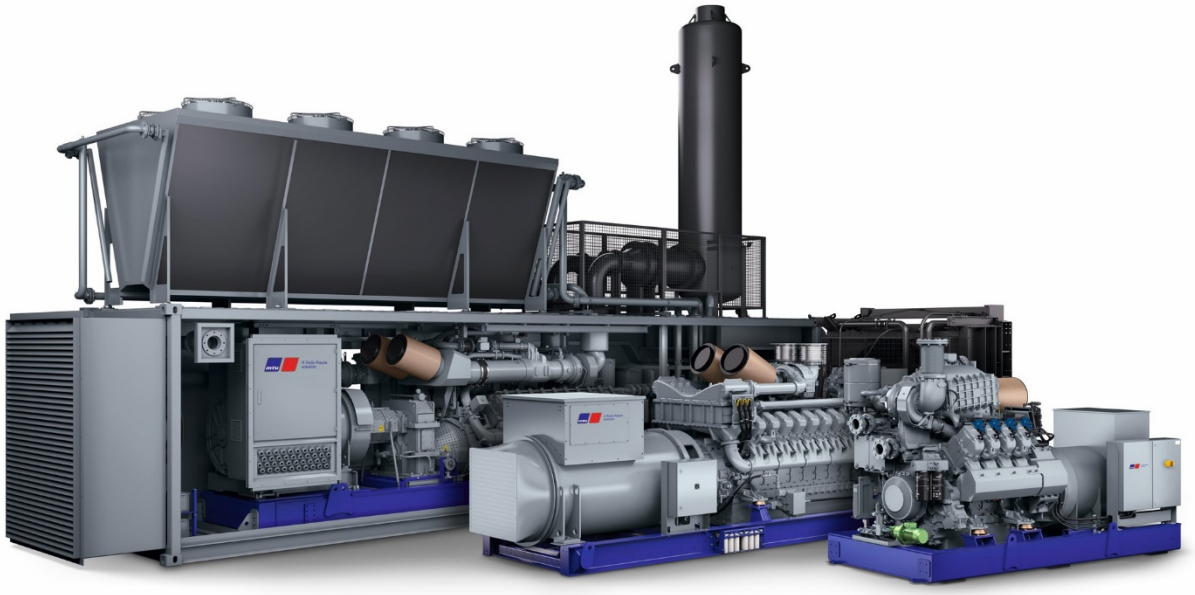

mtu 12V1600 DS750

Technical Specification And Scope of Supply
mtu 12V1600 DS750

Customer: Stewart & Stevenson Power-Products LLC / Atlantic
Technical Specification Number: Q0000050599-1
MTU Order:
Quotation Date: 28. September 2026

1. Technical Specification

Product Type	mtu 12V1600 DS750
Application Group	3D - Standby Power

Power as per MTU Sales Program

Power per genset (ISO 8528)	750 kWel
Derated Power per genset (ISO 8528)	750 kWel
Engine speed	1800 rpm
Intake air temperature	25 deg C
Altitude	100 m

Requirements

Frequency	60 Hz
Fuel Type	Diesel
Generator voltage	480 V
Engine Model	12V1600G71S (24volts)
Grid guideline	No requirements

Selection Criteria

Phase	3 Phase
Unit Specification	UL2200 Certification
IBC Certification	Without
HCAI Certification	Without
Exhaust Emissions (EPA)	EPA Stationary EMERG T2 (40CFR60)
Radiator Design Temperature	50 C
Temp Rise	130 °
Full Load Amps	1128 A
Generator Model	LSA 49.3/M8
Generator Wire Qty	6 Wire
Generator Wire Configuration	WYE
OPU/HSD	Level 3 - Maximum Sound Attenuation Enclosure
Control panel	With Control Panel
Circuit Breaker Options	Single Circuit Breaker
Breaker Wire Color Scheme	Standard Breaker Wire Color Scheme
Country of Operation	US -United States of America
Emission cert. Authority	18 - US EPA US EPA Agency

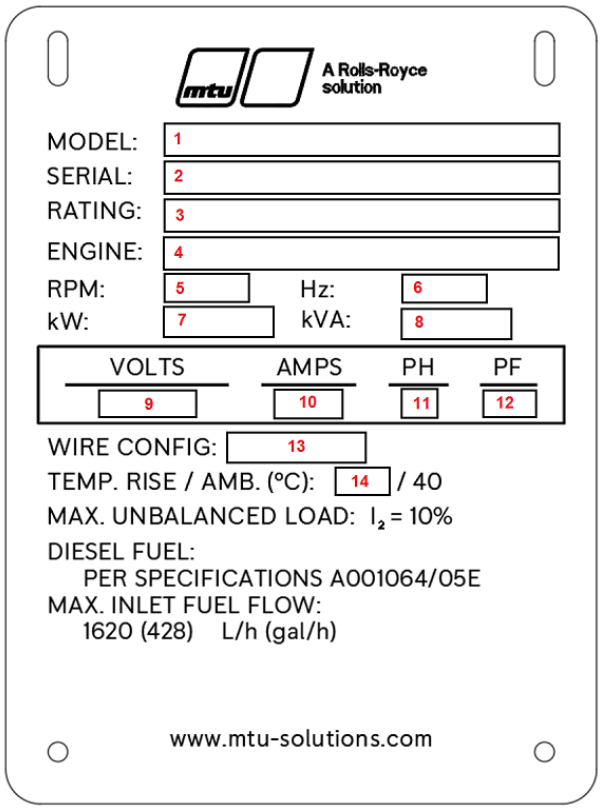

1	mtu 12V1600 DS750	-
2	--	-
4	12V1600G71S (24volts)	-
5	1800	RPM
6	60	Hz
7	750	kWe
8	938	kVA
9	480	V
10	1128	A
11	3	PH
12	0.8	PF
13	WYE	-
14	130	°C

2. Scope of Supply

Specification		QTY
SYSTEM		
System Description		
Unit Specification	UL2200 Certification	1
Enclosure Type	Level 3 - Maximum Sound Attenuation Enclosure	1
Controls	With Control Panel	1
Circuit Breaker	Single Circuit Breaker	1
Breaker Wire Color Scheme	Standard Breaker Wire Color Scheme	1
Dimensional Drawings	• XZ57500100069 • XZ57500100070	1
Engine Electrical Drawings	• XZ574K0000004	1
Electrical Generator Drawings	• XZ57500100063	1
Electrical Option Sheet Drawings	• XZ574K0000009	1
Fuel Tank Drawings	• XZ57500100071	1
Circuit Breaker Drawings	• XZ57500100073	1
Distribution Panel Drawings	• XZ574K0000003	1
Control Panel Drawings	• XZ57464400002	1
Customer Connection Drawings	• XZ574K0000002	1
ENGINE		
Engine Genset		
Engine Model	12V1600G71S (24volts)	1

COOLING

Cooling Package

Radiator Design Temp	50 C	1

PREHEATING

Electric Operated Preheating

Coolant Preheating	Coolant Preheater • -20 Deg F Coolant Preheater (480V 1PH - 5000W) • Model: CL150412-200 Qty 1 *Water Heater Not Wired to the Distribution Panel (If Distribution Panel is Selected)	1

STARTING

Starting Electric

Starting Batteries	Starting Battery (Group 4D), Cables & Battery Rack • Battery Rack mounted and installed • Battery Group 4D Starting Battery filled with acid (Qty 2)	1
Battery Charger	Battery Charger MicroGenius 2 10A • 300W • 10 Amp • 24V • NFPA 110 • M3-22-1210-E	1
Battery Charger Mounting	Battery Charger Mounted & AC/DC Wired • This option will be factory-wired to distribution panel (if applicable)	1

AIR INTAKE

Air Intake Filters

Air Intake	Air Filter (Standard) mtu Air Filter • P/N: SUA90069 Qty 2	1
Air Restriction Indicator	Air Restriction Indicator	1

FUEL

Fuel Systems

Fuel Type	Diesel	1

Fuel Filters

Fuel Water Separator	Fuel Water Separator Standard (Single)	1
Fuel Water Detection Sensor	Water Detection Sensor	1

Fuel Tanks

Fuel Tank Type	Extended Fuel Tank	1
Fuel Tank Capacity	48 Hour	1
Selected Fuel Tank	3030 Gallon Extended Sub Base Fuel Tank	1
Overfill Protection	Without	0
Fuel Tank Ventilation	Standard Vents	1
Leak Switch	Leak Switch Florida DEP EQ Certification: EQ-832	1
Tank Level Alarm Panel	Without	0
Fuel Supply Shutoff	Fuel Supply Shut Off	1

EXHAUST

Exhaust System

Exhaust Silencer	Unit-Mounted Silencer • Silencer Model: OHBE2ZD08CF12TS-2-20040079 (Qty 1)	1

GENERATOR

Generator

Generator Model Number	LSA 49.3/M8	1

Generator Accessories

Excitation System	With PMG	1

CONTROLS

Genset Control Panel

Configured Control Panel Series	MGC-3010 • Rolls Royce Power Systems Generator Set Controllers (MGC Series) are rugged, reliable, all-in-one digital generator set control and load share systems. The MGC-3000 Series is designed to be a high end controller that is well suited for mains fail, paralleled units, and systems with multiple buses. The MGC-3000 Series has all of the necessary items for complete generator set control, protection, and metering with a massive, but easy-to-use, programmable logic system.	1
Control Panel Mounting	Control Panel Unit Mounted LH Side 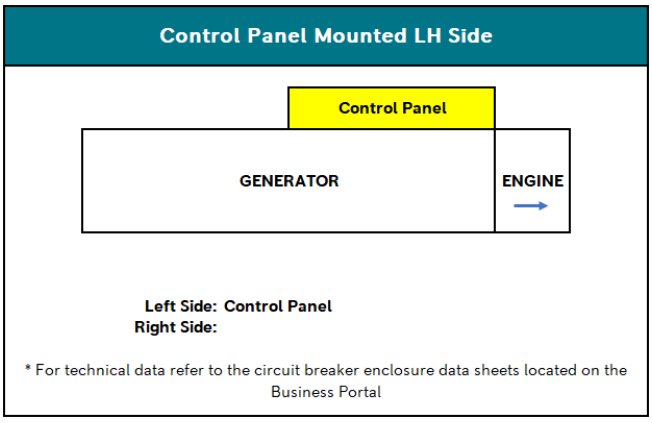	1
Paralleling	Paralleling With mtu Components	1
Remote E-Stop	Remote E-Stop Break Glass Station	1

ProtoNode Solution	The ProtoNode solution is pre-programmed to provide a virtual plug-and-play, easy, complete protocol BACnet MS/TP, BACnet/IP, and EtherNet/IP. There are no configuration files to download in the field, and all configurations are available to the user/installer simply by selecting the proper DIP switches.	1
Ground Fault Protection	Without	0
Remote Annunciator	RDP-110c Annunciator Panel • The RDP-110c is a remote annunciation device used in conjunction with the MGC family of digital generator set controllers to provide remote annunciation of the emergency standby generator system. • This panel allows for two programmable alarms, two programmable pre-alarms, and is compatible with NFPA 110. The MGC detects an alarm or pre-alarm condition and communicates via RS-485 to the RDP-110c. • Unit can be flush or surface mounted.	1

CIRCUIT BREAKER

Circuit Breaker 1

Circuit Breaker Position	Single CB Enclosure: Position 1 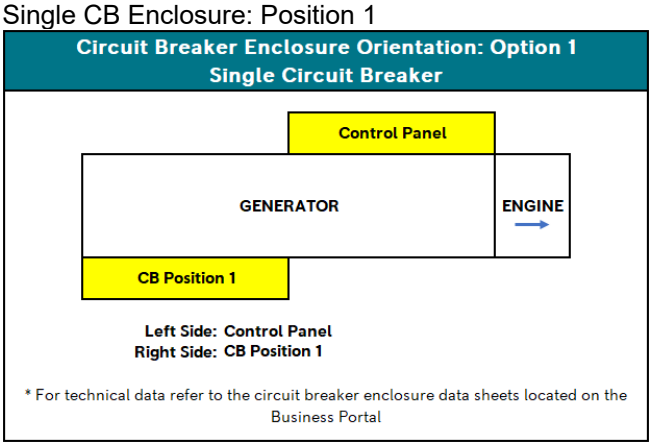 	1
Trip Type	LSI Breaker Trip • LSI breakers provide protection from long time overload, short time overload and instantaneous short circuit events. Specific overload current values and time delays vary with breaker type and trip unit.	0
Rating	100%	0

Spring Charging Motor (MMM)	Circuit Breaker SQ-D Spring Charging Motor (MMM)	0
ERMS	The Energy Reduction Maintenance Setting (ERMS) switch is used to reduce the current and/or time required to trip a circuit breaker. It does this by reducing the instantaneous protection setting of the breaker, allowing reduction of the fault clearing time and a faster trip. If a fault occurs when the switch is engaged, Arc Flash Incident Energy (AFIE) level exposure is reduced.	1
Amperage List	1200 Amps	1
Selected Circuit Breaker 1:	1200 Amp 3 Pole 100% LSI Motor Operated ERMS CB SQ-D PKL36120CU63AE1MO	1
Service Entrance Rated	Service Entrance Rated	1
Circuit Breaker 1 Accessories		
UnderVoltage Trip (MN)	Circuit Breaker SQ-D Under Voltage Trip (MN)	1
Auxiliary Switch (OF)	Circuit Breaker SQ-D Auxiliary Switch (OF)	1
Padlock Provision	Circuit Breaker Padlock Provision	1
Distribution Panel		
Distribution Panel	Distribution Panel • 125A 240VAC 1PH, UL Listed, 14 Position	1
ENCLOSURE		
Housing		
Wind Rating	130 MPH	1

Enclosure Material	Level 3 Steel • Weather proof enclosure constructed of heavy gauge steel with fixed storm proof panels. • Enclosure consists of a bolted and welded construction. • Hinged, lockable double-door access on both sides of the enclosure. Includes UL 94 HF-1 compliant, 1.5" thick sound attenuated foam insulation installed inside enclosure walls, and attenuating air intake baffles.	1

PAINTING

Painting

Paint Color	Corporate Grey	1

BASEFRAME

Mounts Baseframe

Selected Vibration Isolation	Pad Isolators • 1/4" thick elastomeric pad in rectangular shape placed under the base frame at each of the pre-drilled isolator mounting holes. • P/N: X54599100330	1

WARRANTY

Warranty

Warranty Terms	2 Year 3000 Hour Standby Warranty	1

SHIPPING & STORAGE

Freight

Delivery Type	Ship Unit Wet	1

DOCUMENTATION

Manuals

Standard Documentation	Manual English USB	1

FUNCTIONAL TESTING

Acceptance Testing

Standard Commercial Test	1

Diesel Generator Set

mtu 12V1600 DS750

750 kWe/60 Hz/Standby/208 - 600V

Reference *mtu* 12V1600 DS750 (690 kWe) for Prime Power for Stationary Emergency Rating Technical Data

System ratings

Voltage (L-L)	208V †	240V †	380V †	480V †	600V
Phase	3	3	3	3	3
PF	0.8	0.8	0.8	0.8	0.8
Hz	60	60	60	60	60
kW	750	750	750	750	750
kVA	937	937	937	937	937
Amps	2,602	2,255	1,424	1,127	902
skVA@30% voltage dip	1,960	1,960	1,810	2,000	2,005
Generator model	LSA 49.3 L9	LSA 49.3 L9	LSA 49.3 M8	LSA 49.3 M8	LSA 49.3 M8
Temp rise	130 °C/40 °C	130 °C/40 °C	130 °C/40 °C	130 °C/40 °C	130 °C/40 °C
Connection	12 LEAD WYE	12 LEAD DELTA	6 LEAD WYE	6 LEAD WYE	6 LEAD WYE

† UL 2200 offered

Certifications and standards

- Emissions
  - EPA Tier 2 certified
  - South Coast Air Quality Management District (SCAQMD)
- Generator set is designed and manufactured in facilities certified to standards ISO 9001:2008 and ISO 14001:2004
- Seismic certification – optional
  - 2021 IBC certification
  - HCAI pre-approval
- UL 2200 - optional (refer to *System ratings* for availability)
- CSA - optional
  - CSA C22.2 No. 100
  - CSA C22.2 No. 14
- Performance Assurance Certification (PAC)
  - Generator set tested to ISO 8528-5 for transient response
  - Verified product design, quality, and performance integrity
  - All engine systems are prototype and factory tested
- Power rating
  - Accepts rated load in one step per NFPA 110
  - Permissible average power output during 24 hours of operation is approved up to 85%.

Standard features*

- Single source supplier
- Global product support
- Two (2) Year/3,000 Hour Basic Limited Warranty
- 12V1600 diesel engine
  - 22.44 liter displacement
  - Common rail fuel injection
  - 4-cycle
- HVO and GtL fuels meeting fuel specification EN15940
- Engine-generator resilient mounted
- Complete range of accessories
- Cooling system
  - Integral set-mounted
  - Engine-driven fan
- Generator
  - Brushless, rotating field generator
  - 2/3 pitch windings
  - Permanent Magnet Generator (PMG) supply to regulator
  - 300% short circuit capability
- Digital control panel(s)
  - UL recognized, CSA certified, NFPA 110
  - Complete system metering
  - LCD display

Standard equipment*

Engine

- Air cleaners
- Oil pump
- Oil drain extension and shut-off valve
- Full flow oil filter
- Closed crankcase ventilation
- Jacket water pump
- Thermostats
- Blower fan and fan drive
- Radiator - unit mounted
- Electric starting motor - 24V
- Governor - electronic isochronous
- Base - formed steel
- SAE flywheel and bell housing
- Charging alternator - 24V
- Battery rack and cables
- Flexible fuel connectors
- Flexible exhaust connection
- EPA certified engine

Generator

- NEMA MG1, IEEE, and ANSI standards compliance for temperature rise and motor starting
- Sustained short circuit current of up to 300% of the rated current for up to 10 seconds
- Self-ventilated
- Superior voltage waveform
- Digital, solid state, volts-per-hertz regulator
- Brushless alternator with brushless pilot exciter
- 4 pole, rotating field
- 130 °C standby temperature rise
- 1-bearing, sealed
- Flexible coupling
- Full amortisseur windings
- 125% rotor balancing
- 3-phase voltage sensing
- ± 0.25% voltage regulation no load to full load
- 100% of rated load - one step
- 5% maximum total harmonic distortion

Digital control panel(s)

- Digital metering
- Engine parameters
- Generator protection functions
- Engine protection
- CANBus ECU communications
- Windows®-based software
- Multilingual capability
- Communications to remote annunciator
- Programmable input and output contacts
- UL recognized, CSA certified, CE approved
- Event recording
- IP 54 front panel rating with integrated gasket
- NFPA 110 compatible

* Represents standard product only. Consult the factory/***mtu*** Distributor for additional configurations.

Application data

Engine

Manufacturer	***mtu***
Model	12V1600G71S
Type	4-cycle
Arrangement	12-V
Displacement: L (cu in)	22.44 (1,369)
Bore: cm (in)	12.6 (4.96)
Stroke: cm (in)	15 (5.91)
Compression ratio	15.89:1
Rated rpm	1,800
Engine governor	electronic isochronous (ADEC)
Maximum power: kWm (bhp)	836 (1,121)
Steady state frequency band	± 0.25%
Air cleaner	dry

Liquid capacity

Total oil system: L (gal)	73 (19.3)
Engine jacket water capacity: L (gal)	65 (17.2)
System coolant capacity: L (gal)	109 (28.8)

Electrical

Electric volts DC	24
Cold cranking amps under -17.8 °C (0 °F)	1,050
Batteries: group size	4D
Batteries: quantity	2

Fuel system

Fuel supply connection size	-10 JIC 37° female
Fuel return connection size	-6 JIC 37° female
Maximum fuel lift: m (ft)	3 (10)
Recommended fuel	diesel #2/HVO
Total fuel flow: L/hr (gal/hr)	328 (86.7)

Fuel consumption

At 100% of power rating: L/hr (gal/hr)	193.3 (51.1)
At 75% of power rating: L/hr (gal/hr)	144.1 (38.1)
At 50% of power rating: L/hr (gal/hr)	107.3 (28.3)

Cooling - radiator system

Ambient capacity of radiator: °C (°F)	50 (122)
Maximum restriction of cooling air: intake and discharge side of radiator: kPa (in. H_20)	0.2 (0.8)
Water pump capacity: L/min (gpm)	517 (137)
Heat rejection to coolant: kW (BTUM)	285 (16,208)
Heat rejection to after cooler: kW (BTUM)	215 (12,227)
Heat radiated to ambient: kW (BTUM)	71.2 (4,049)
Fan power: kW (hp)	29 (38.9)

Air requirements

Aspirating: *m^3/min (SCFM)	68.4 (2,416)
Air flow required for radiator cooled unit: *m^3/min (SCFM)	1,007 (35,579)
Remote cooled applications; air flow required for dissipation of radiated generator set heat for a maximum of 25 °F rise: *m^3/min (SCFM)	260 (9,244)

* Air density = 1.184 kg/m^3 (0.0739 lbm/ft^3)

Exhaust system

Gas temperature (stack): °C (°F)	481 (898)
Gas volume at stack temperature: m^3/min (CFM)	161 (5,686)
Maximum allowable back pressure at outlet of engine, before piping: kPa (in. H_20)	8.5 (34.1)

Weights and dimensions

Genset will be in a Level 3 Enclosure

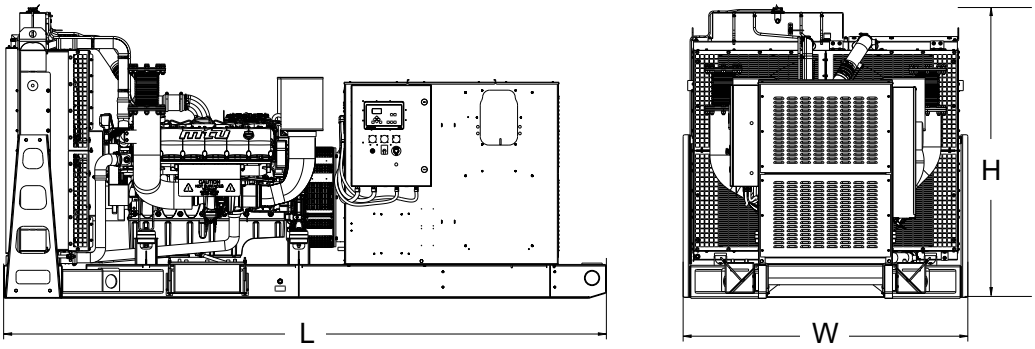

Drawing above for illustration purposes only, based on standard open power 480 volt generator set. Lengths may vary with other voltages. Do not use for installation design. See website for unit specific template drawings.

System	Dimensions (L x W x H)	Weight
Open Power Unit (OPU)	4,521 x 2,135 x 2,179 mm (178 x 84.1 x 85.8in)	4,774-5,829 kg (10,524-12,850 lb)

Weights and dimensions are based on open power units and are estimates only. Consult the factory for accurate weights and dimensions for your specific generator set.

Sound data

Unit type	Standby full load
Level 0 (OPU): dB(A)	94.9

Sound data is provided at 7 m (23 ft). Generator set tested in accordance with ISO 8528-10 and with infinite exhaust.

Emissions data

Refer to Emission Data Sheet (EDS) for emissions data. Consult your ***mtu*** Distributor for more information.

Rating definitions and conditions

- Standby ratings apply to installations served by a reliable utility source. The standby rating is applicable to varying loads for the duration of a power outage. No overload capability for this rating. Ratings are in accordance with ISO 8528-1, ISO 3046-1, BS 5514, and AS 2789. Average load factor: ≤ 85%.
- Nominal ratings at standard conditions: 25 °C and 300 meters (77 °F and 1,000 feet).
- Deration factor:
  - Consult your local ***mtu*** Distributor for altitude derations.
  - Consult your local ***mtu*** Distributor for temperature derations.

Subject to change. | 231263 | 2026-06

The values provided in this specification sheet are typical and are intended for limited design reference only.

Certificate of Compliance

Certificate Number:

UL-US-L3559-3111-81200102-4

Report Reference:

AU3559-20100218

Issue Date:

2025-04-07

Issued to:

Rolls-Royce Solutions America Inc
100 Power Dr, Mankato, MN, 56001-4790, US

This certificate confirms that representative samples of:

FTSR - Engine Generators

See Addendum Page for Product Designation(s).

Have been evaluated by UL in accordance with the Standard(s) indicated on this Certificate.

UL 2200, 2nd Ed., Issue Date: 2012-06-01, Revision Date: 2015-07-29

Additional Information:
See UL Product iQ® at https://iq.ulprospector.com for additional information.

This Certificate of Compliance indicates that representative samples of the product described in the certification report have met the requirements for UL certification. It does not provide authorization to apply the UL Mark. Only the Authorization Page that references the Follow-Up Services Procedure for ongoing surveillance provides authorization to apply the UL Mark.

Only those products bearing the UL Mark should be considered as being UL Certified and covered under UL's Follow-Up Services.

Look for the UL Certification Mark on the product.

David Piecuch
UL Mark Certification Program Owner

Any information and documentation involving UL Mark services are provided on behalf of UL LLC (UL) or any authorized licensee of UL. For questions, please contact UL Solutions Customer Service at https://www.ul.com/contact-us.

© 2025 UL LLC. All rights reserved.

CERTIFICATE OF COMPLIANCE

Certificate number	UL-US-L3559-3111-81200102-4
Report reference	AU3559-20100218
Date	2025-04-07

This is to certify that representative samples of the product as specified on this certificate were tested according to the current UL requirements.

Engine generators

Model(s): 6, 8, 10 or 12, followed by R or V, followed by 1600 *Models 6, 8, 10, or 12, followed by R or V, followed by 1600, followed by D, followed by S, followed by a number ranging from 230 to 900. May have additional prefix or suffix letters or numbers.*

Any information and documentation involving UL Mark services are provided on behalf of UL LLC (UL) or any authorized licensee of UL. For questions, please contact UL Solutions Customer Service at https://www.ul.com/contact-us.

© 2025 UL LLC. All rights reserved.

Form-ULID-019496 – ver 1.0

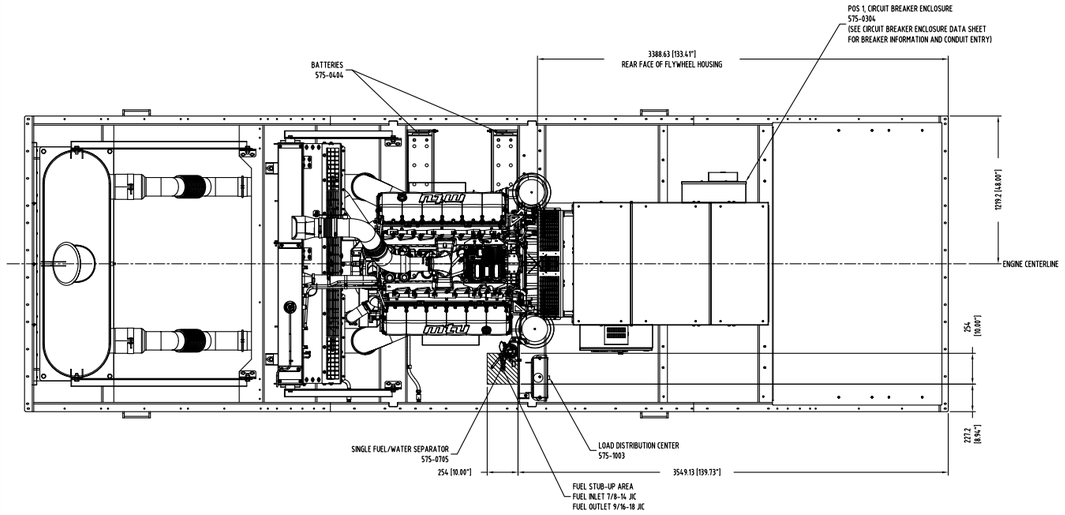

TOP VIEW

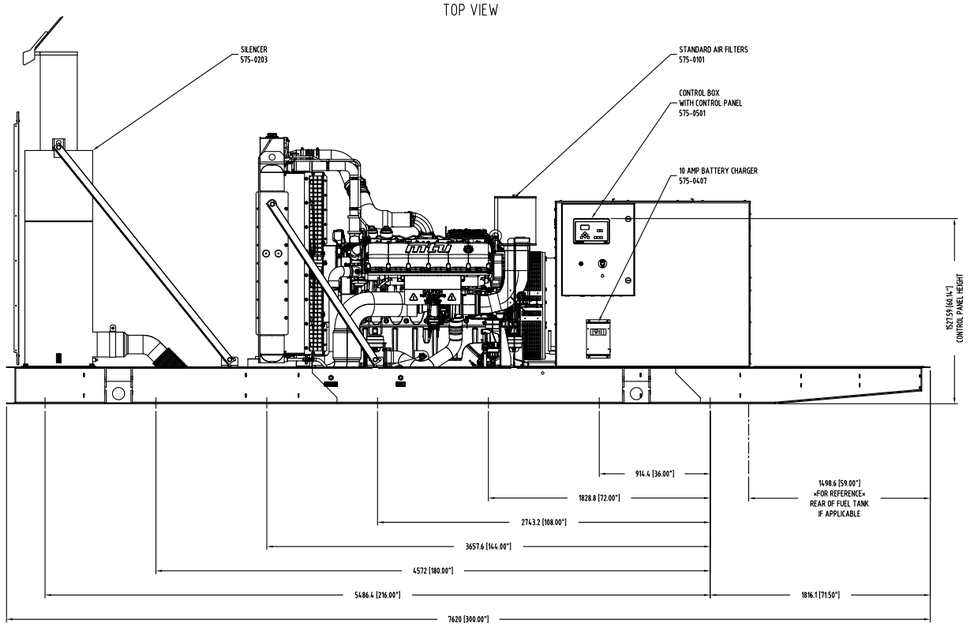

LEFT VIEW

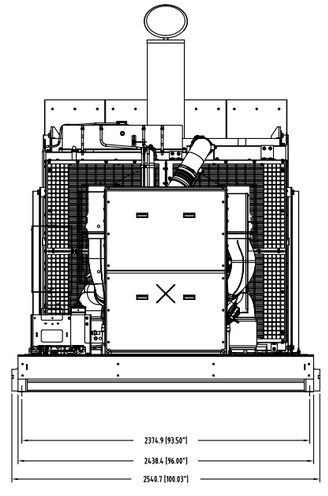

REAR VIEW

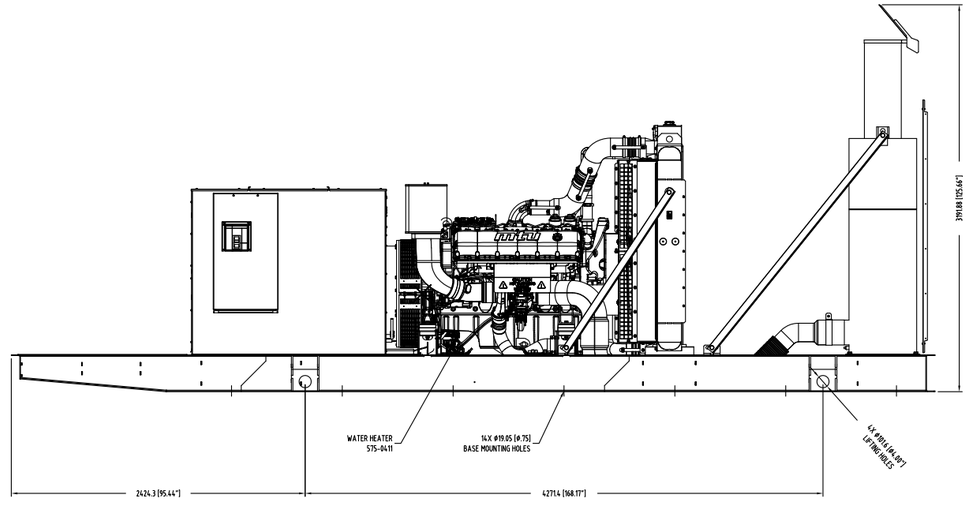

RIGHT VIEW

REVISION	DATE	DESCRIPTION
B	2024-10-01	Options Table Updated
A	2024-03-11	Options Table Updated

A Rolls-Royce solution

ALL INDUSTRIAL PROPERTY RIGHTS RESERVED. DISCLOSURE, REPRODUCTION OR USE FOR ANY OTHER PURPOSE IS PROHIBITED UNLESS OUR EXPRESS PERMISSION HAS BEEN GIVEN. ANY INFRINGEMENT RESULTS IN LIABILITY TO PAY DAMAGES.

APPLICABLE MODELS:

MTU 12V1600 DS750
MTU 12V1600 DS800
MTU 12V1600 DS900

THIRD ANGLE PROJECTION

DRAWN TO SCALE
DIMENSIONS: MM [INCH]

DATE CREATED: 2021-12-13

DIMENSIONAL LAYOUT

DESCRIPTION: 750-900 kW Genset, Housed Base

ENGINE: MTU, 12V1600+

DRAWING NUMBER: XZ57500100069

SHEET: 1 of 2

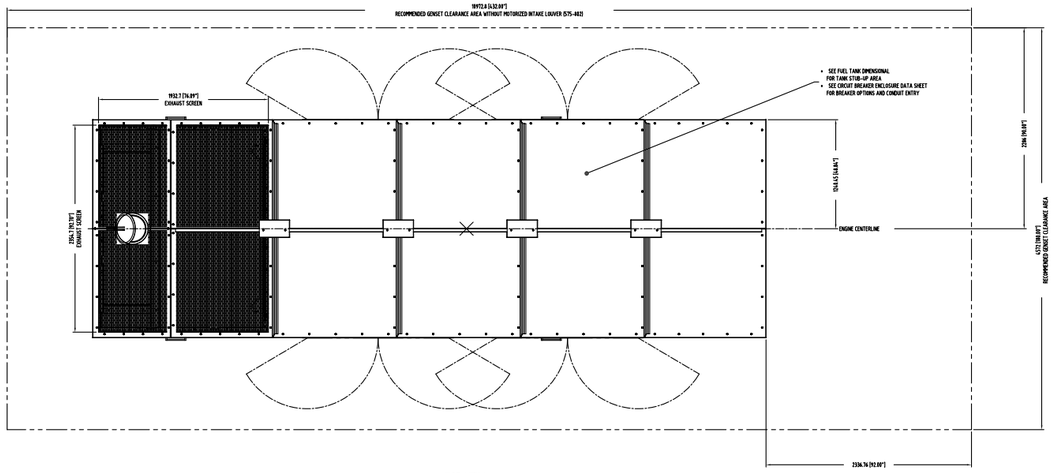

TOP VIEW

Reference the Drawing Options Table and within the Layer Properties turn on/off the Drawing Codes that may or may not apply to your configuration.

Note 1: Some options may not be referenced. Only options which visibly change the drawing are selectable.

Note 2: Weight range in title block is for enclosure and enclosure options only

DRAWING OPTIONS: 12V1600+			SELECTED OPTION
GROUP	DRAWING CODE	DESCRIPTION	
Standard Unit	575-0003	Level 1, 2, & 3 Housing	✓
	575-0004	Level 1, 2, & 3 Housing w/ DPF	
Housing Options	575-0001	Gravity Exhaust Louver	
	575-0002	Motorized Intake Louver	
	575-0003	Interior Housing Lights	
	575-0004	Interior Space Heater	
	575-0005	HVHZ Enclosure Supports	

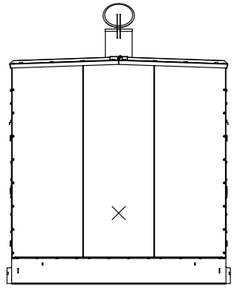

FRONT VIEW

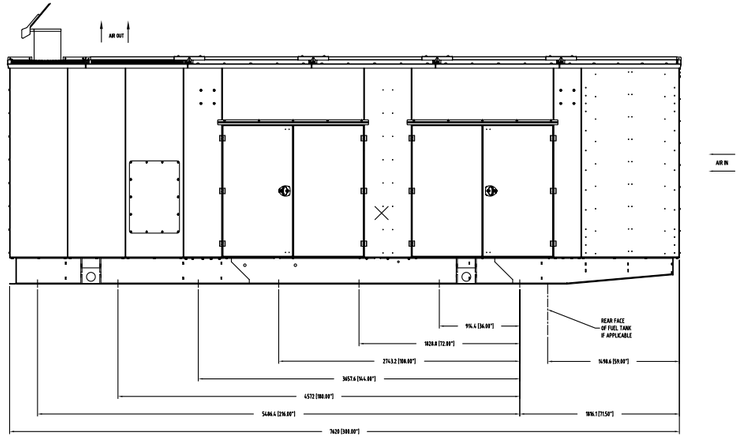

LEFT VIEW

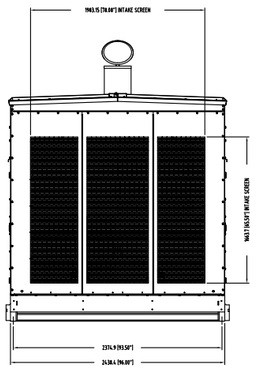

REAR VIEW

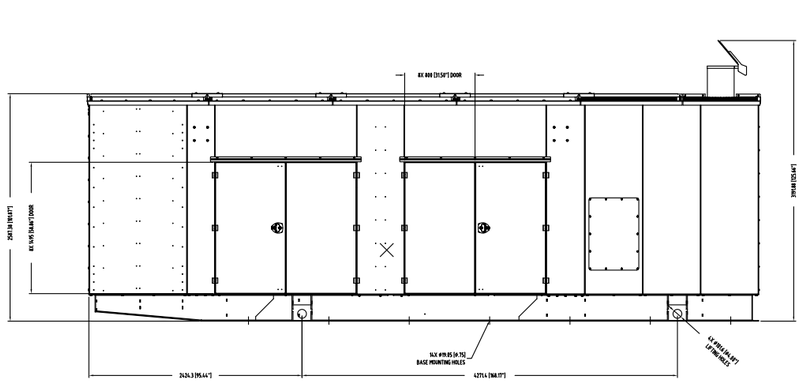

RIGHT VIEW

REVISION	DATE	DESCRIPTION
A	2024-02-08	ADDED DPF TO DRAWING OPTIONS

A Rolls-Royce solution

ALL INDUSTRIAL PROPERTY RIGHTS RESERVED. DISCLOSURE, REPRODUCTION OR USE FOR ANY OTHER PURPOSE IS PROHIBITED UNLESS OUR EXPRESS PERMISSION HAS BEEN GIVEN. ANY INFRINGEMENT RESULTS IN LIABILITY TO PAY DAMAGES.

APPLICABLE MODELS:

MTU 12V1600 DS750
MTU 12V1600 DS800
MTU 12V1600 DS900

THIRD ANGLE PROJECTION

DRAWN TO SCALE
DIMENSIONS: MM [INCH]

DATE CREATED: 2021-12-13

DIMENSIONAL LAYOUT

DESCRIPTION: 750-900 kW Genset, Housing

ENGINE: MTU, 12V1600+

WEIGHT (MIN-MAX): REF SPEC SHEET

DRAWING NUMBER: XZ57500100070

SHEET: 1 of 1

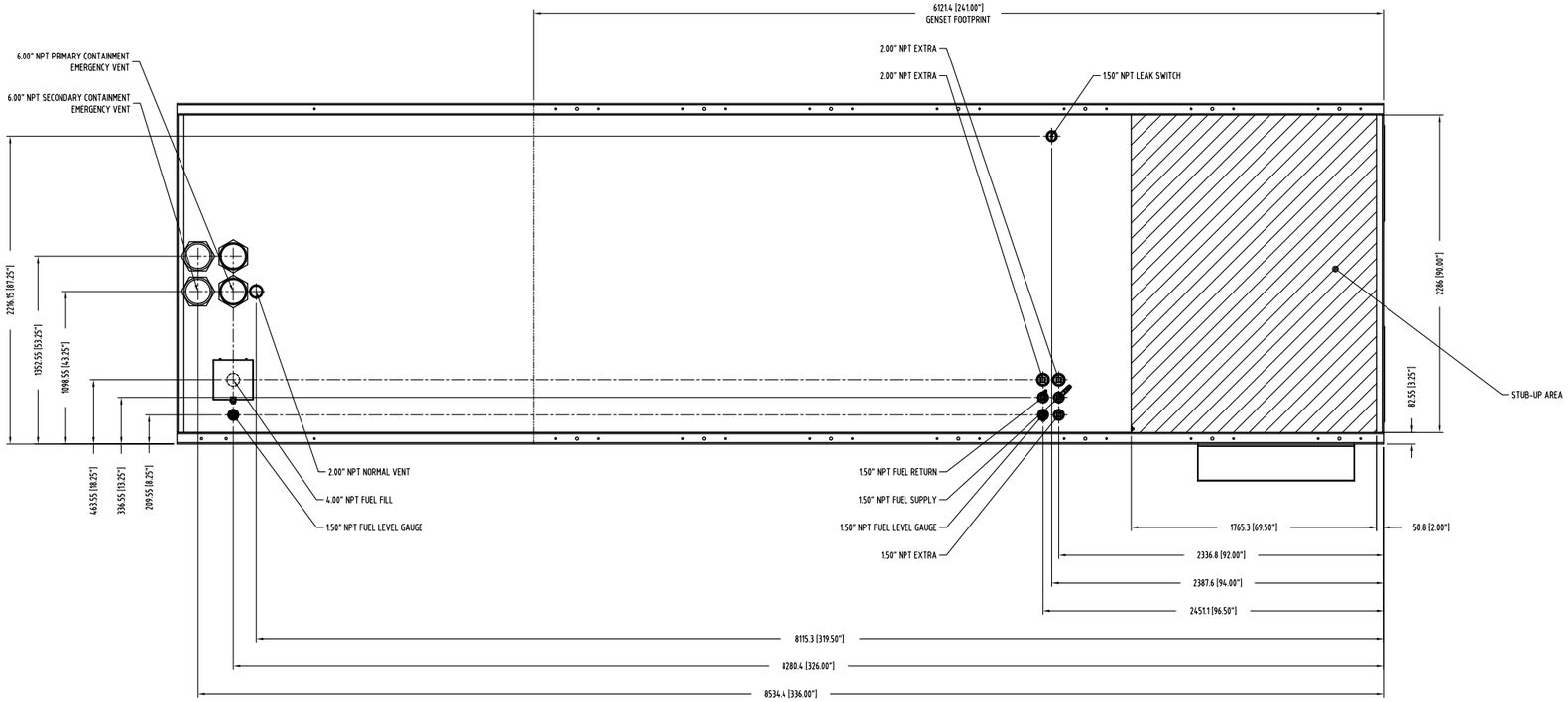

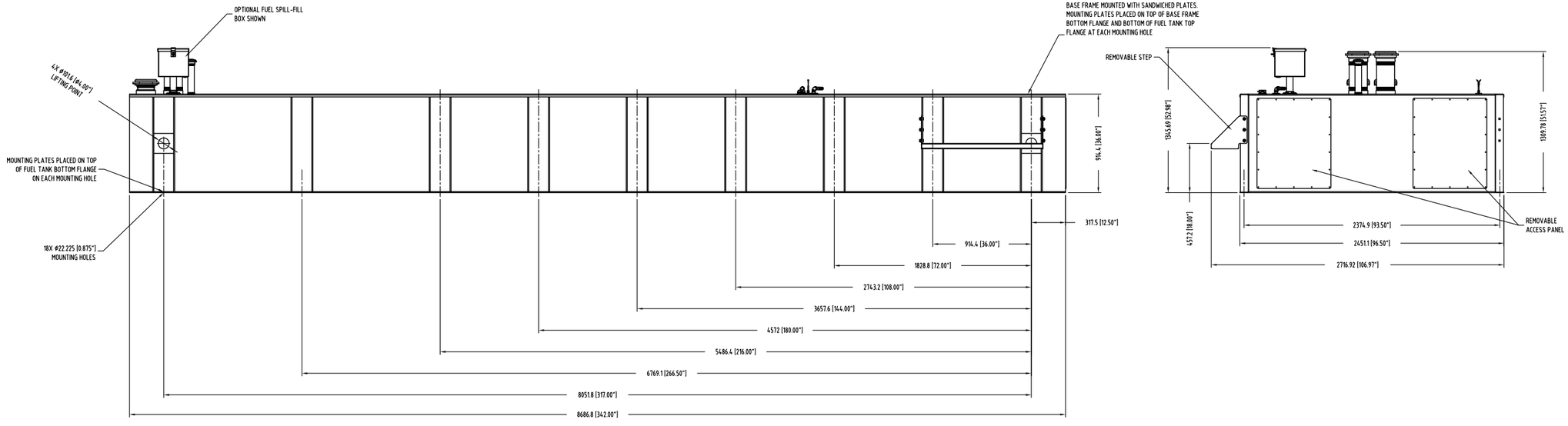

REVISION	DATE	DESCRIPTION
D	2025-05-07	STANDARDIZED TANK OFFERINGS (12 & 24 HR STANDARD, 24 & 48 HR EXTENDED)
C	2025-03-06	Added IBC venting install details
B	2023-11-30	Added overall length dimensions
A	2023-10-06	Added base frame mounting axis to side views.

A Rolls-Royce solution

ALL INDUSTRIAL PROPERTY RIGHTS RESERVED. DISCLOSURE, REPRODUCTION OR USE FOR ANY OTHER PURPOSE IS PROHIBITED UNLESS OUR EXPRESS PERMISSION HAS BEEN GIVEN. ANY INFRINGEMENT RESULTS IN LIABILITY TO PAY DAMAGES.

APPLICABLE MODELS:
MTU 12V1600 DS750
MTU 12V1600 DS800
MTU 12V1600 DS900

THIRD ANGLE PROJECTION

DRAWN TO SCALE
DIMENSIONS: MM [INCH]

DATE CREATED: 2021-12-16

DIMENSIONAL LAYOUT

DESCRIPTION: 750-900kW 48HR 3030Gal Extended Tank

ENGINE: MTU, 12V1600+

DRAWING NUMBER: XZ57500100071

SHEET: 5 of 6

SINGLE FUEL WATER SEPARATOR

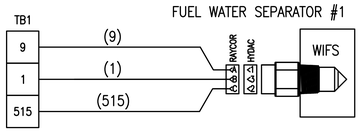

WIFS WATER IN FUEL SENDER

FUEL LEVEL GAUGE AND FUEL LEAK SWITCH

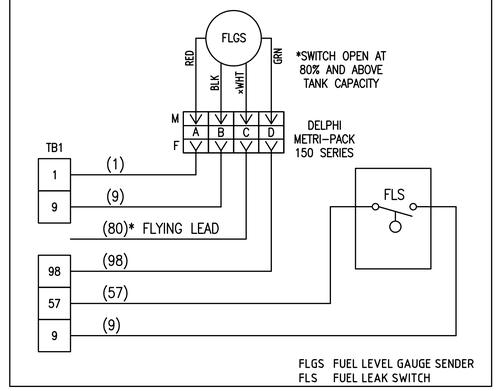

FLGS FUEL LEVEL GAUGE SENDER
FLS FUEL LEAK SWITCH

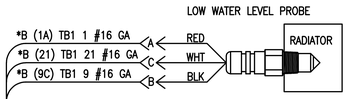

TO: CONTROL PANEL BACK — B

TO: CONTROL PANEL BACK — A

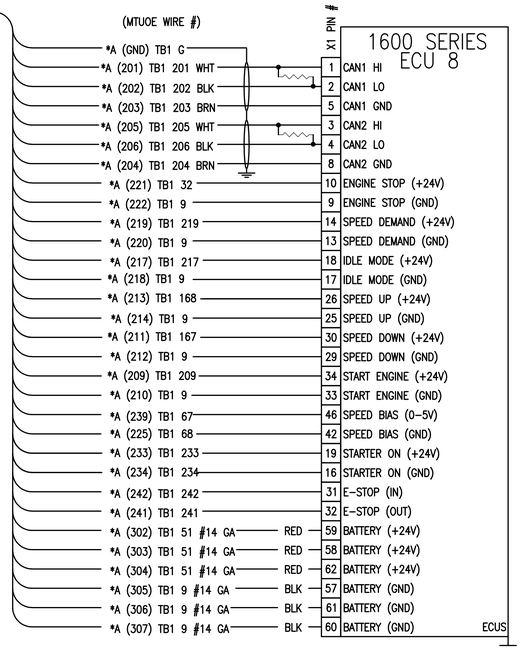

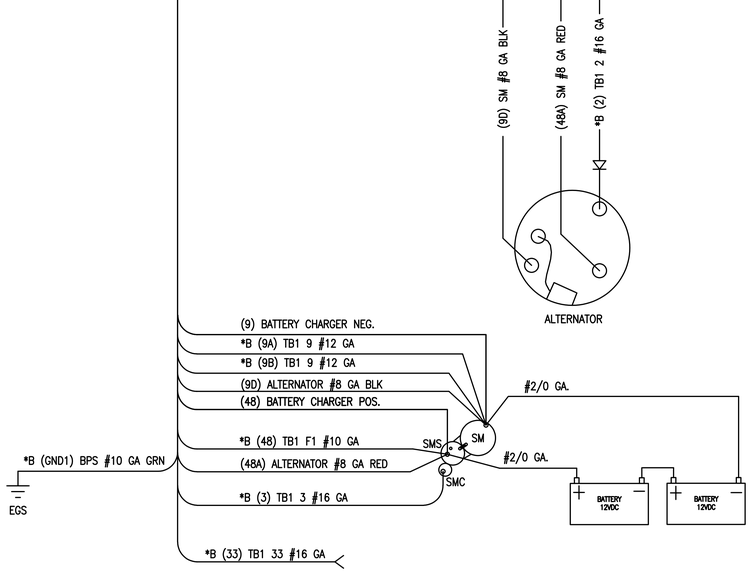

LEGEND:

ALT	ENGINE ALTERNATOR
BC	BATTERY CHARGER
F6	FUSE ATO 5A
MGC	DIGITAL GENSET CONTROLLER
ECUS	ENGINE CONTROL UNIT STUD
EGS	ENGINE GROUND STUD
FLGS	FUEL LEVEL GAUGE SENDER
FLS	FUEL LEAK SWITCH
FWS	FUEL WATER SEPARATOR
R1-3	RESISTOR 120 OHM ½ W
SMR	STARTER MOTOR RIGHT STANDARD
SML	STARTER MOTOR LEFT REDUNDANT
SMC	STARTER MOTOR COIL
SMS	STARTER MOTOR SOLENIOD
TB1	TERMINAL BOARD 1 (CONTROL PANEL)
TB4	TERMIAL BOARD 4 (AC CONNECT BOX)

NOTES:

1. WIRE NUMBERS ARE IN PARENTHESIS.
2. WIRING IS #20 GA. UNLESS OTHERWISE SPECIFIED.
3. SHORT DASHED LINES (------) INDICATE OPTIONAL EQUIPMENTS WIRING.

*X (X) XXX X	
*X	DRAWING DESTINATION
(X)	WIRE NUMBER
XXX	DESTINATION
X	DESTINATION TERMINAL

10v/12v 1600
12v 1600+

Aenderungsbeschreibung/Description of revision: REVISE FOR 1600+ ENGINE
kommt vor/Frequency: KOMMT_VOR

Buchst./Rev.Ltr.	Erh-Antrags-Nr./Promotion Request No.	Aenderungs-Nr./Change Notice No.	Bearbeitungsstatus/Lifecycle
d.4	PR077798	CN028775	Released

Rolls-Royce Solutions GmbH

Allgemeintoleranzen / General Tolerances ISO 2768-mK
Bauart/Type: ENGINE 1600/1600+
Ausfuehrung u. Lieferung / Tech. Characteristics: ----
Oberflaechenschutz /Surface Protection: ----
Verwendbar fuer Typ / Applicable to Model: ----
Projekt-/Auftrags-Nr. / Project/Order No.: ----
Referenz-Nr./Ref.No.: ----
Emission ID: ----

Masse / Size ISO 14405
Oberflaechenangaben nach MTN5033 / Surface Specification per MTN5033
Massstab/Scale: MABSTAB
Masse/Mass: 0.000000 kg
Format/Size: A2
Allgemeine Fertigungs- vorschriften nach MAN 333 / Production Specification per MAN 333
Werkstoff / Material: ----
Halbzeug,Modell,Gesenk / Semifinished Product,Pattern,Die: ----
Material-Nr./Material-No.: XZ574K0000004

	Datum/Date	Name
Erstellt/Drawn	14.08.2021	groenke do
Geprueft/Checked	25.08.2021	groenke do
Norm.	01.10.2021	ramireddy
Gepr.	01.10.2021	ramireddy
Genehmigt/Released	01.10.2021	ramireddy

Benennung/Title: SYSTEM 1600/1600+ SYSTEM ELECTRICAL SYSTEM DRAWING
Zeichnungs-Nr./Drawing No.: FDH00000000001204595
Beschreibung/Description: 450-900 kW
Blatt/Sheet: 1/4

Alle Rechte aus Schutzrechtsanmeldungen Vorbehalten. Weitergabe, Vervielfältigung, oder sonstige Verwertung ohne Zustimmung nicht gestattet. Zuwiderhandlungen verpflichten zu Schadenersatz.
All industrial property rights reserved. Disclosure, reproduction or use for any other purpose is prohibited unless our express permission, has been given. Any infringement results in liability to pay damages.

CUSTOMER BUSS CONNECTION 480V

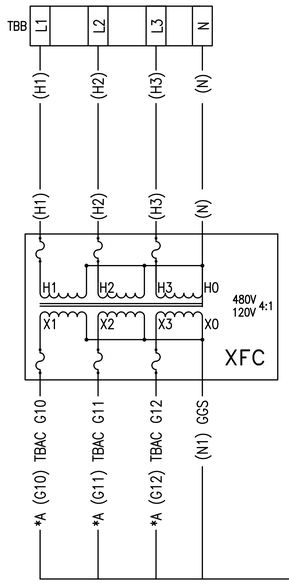

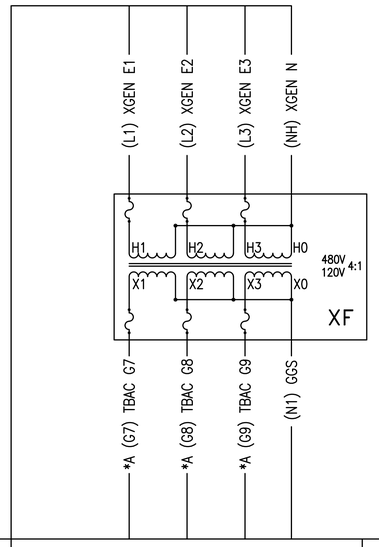

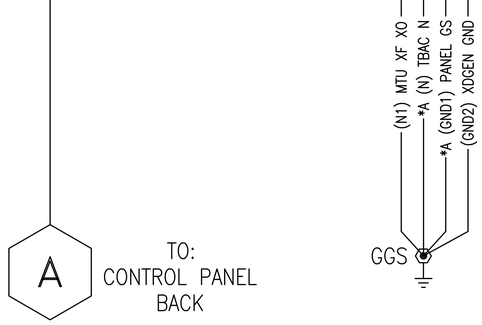

RTD OPTION

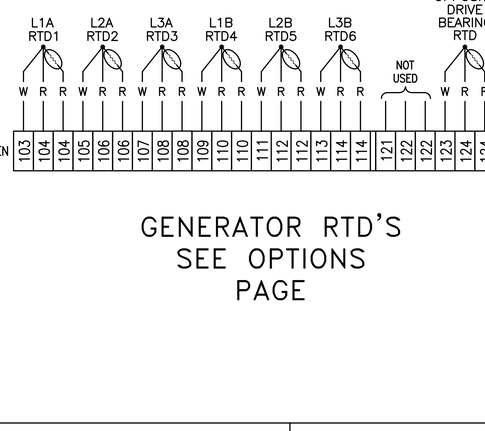

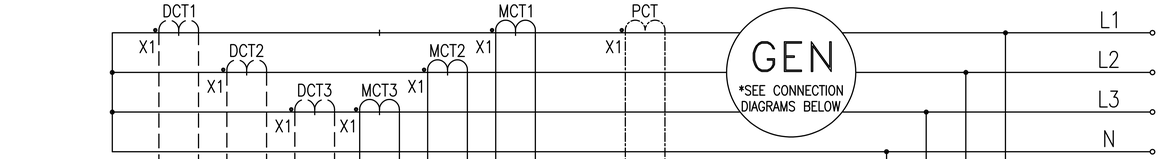

GENERATOR RTD'S
SEE OPTIONS
PAGE

DIFFERENTIAL CTs
* ONLY REMOVE
JUMPERS WHEN
CONNECTED TO
DEVICE

INPUT OPTIONS

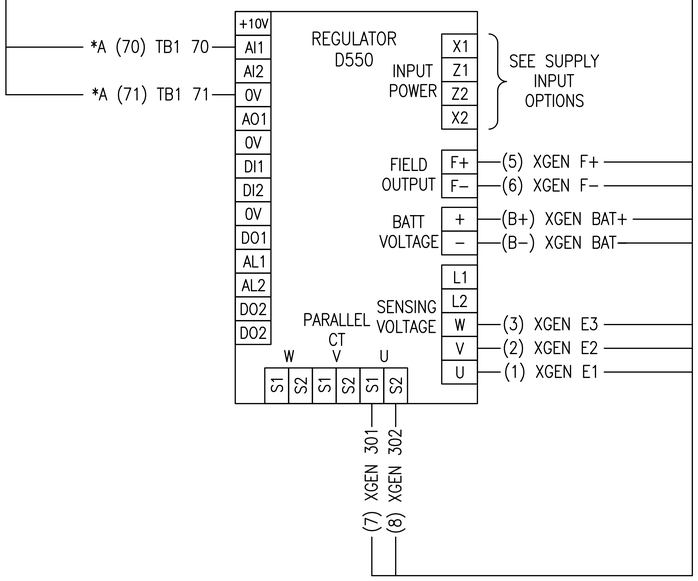

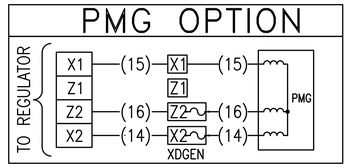

WYE 6 WIRE

HZ	L–L	L–LO
60	380	219
	480	277
	600	346
	2400	1386
	3300	1905
	4160	2402
	6600	3811
	13200	7620
	13800	7967
50	380	219
	400	231
	415	240
	3300	1905
	6600	3811
	11000	6351

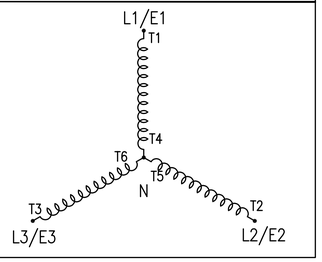

LEGEND

GGS	GENERATOR GROUND STUD
TBB	TERMINAL BOARD BREAKER ENCLOSURE
XDGEN	LS GENERATOR TERMINAL BLOCKS
XF	TRANSFORMER – CONTROL VOLTAGE
XFC	TRANSFORMER – CUSTOMER BUSS

6 WIRE 480 VAC

Aenderungsbeschreibung/Description of revision
INITIAL RELEASE

kommt vor/Frequency KOMMT_VOR

Buchst./Rev.Ltr.	Erh-Antrags-Nr./Promotion Request No.	Aenderungs-Nr./Change Notice No.	Bearbeitungsstatus/Lifecycle
-.4	PR077798	----	Released

Passmass Fit / Massgs in Deviation Dim

Allgemeintoleranzen / General Tolerances ISO 2768-mK
Benennung/Name: 1600+ LS GENERATOR
Ausfuehrung u. Lieferung / Tech. Characteristics: ----
Oberflaechenschutz /Surface Protection: ----
Verwendbar fuer Typ / Applicable to Model: ----
Projekt-/Auftrags-Nr. / Project/Order No.: ----
Referenz-Nr./Ref.No.: ----
Emission ID: ----

Oberflaechenangaben nach MTN5033 Surface Specification per MTN5033
Allgemeine Fertigungs- vorschriften nach MAN 332
Production Specification per MAN 332

Part.Dw. Mem. Ack.	shaik farh	01.10.2021
Mod.Dw. Mod.Ack.	----	----

ACAD | Datum/Date | Name
Ersteller | 15.01.2021 | groenke do
Bearb. | 06.09.2021 | groenke do
Norm. | 01.10.2021 | ramireddy
Gepr. Checked | 01.10.2021 | ramireddy

Masse / Size ISO 14405
Massstab/Scale: MABSTAB
Masse/Mass: ----
kg/Format/Size: .
Werkstoff / Material: ----
Halbzeug,Modell,Gesenk / Semifinished Product,Pattern,Die: ----
Material-Nr./Material-No.: XZ57500100063

Benennung/Title: ----
ANORDNUNGSZEICHNUNG
1600+
ARRANGEMENT DRAWING
ELECTRICAL SYSTEM DRAWING

Zeichnungs-Nr./Drawing No.: CAD07296414
Blatt Sheet: 2/4
Beschreibung/Description: 750-900 kW

Die Rechte aus Schutzrechtsanmeldungen, Gebrauchs-Mustereintrag, Verwertlöigung, oder Benutzung nicht gestattet. Zuwiderhandlungen verpflichten zum Schadenersatz. All industrial property rights reserved. Disclosure, reproduction or use for any other purpose is prohibited unless our express permission has been given. Any infringement results in liability to pay damages.

A Rolls-Royce solution
Rolls-Royce Solutions GmbH

BATTERY CHARGER

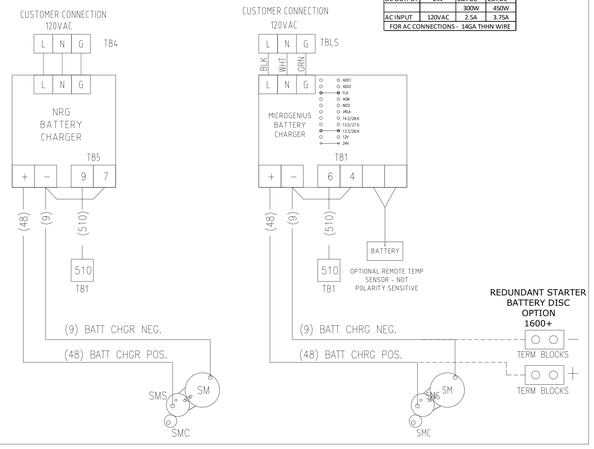

MICROGENIUS2			
DC OUTPUT	24V	10A DC	15A DC
		300W	450W
AC INPUT	120VAC	2.5A	3.75A
FOR AC CONNECTIONS - 14GA THHN WIRE			

REMOTE E-STOP

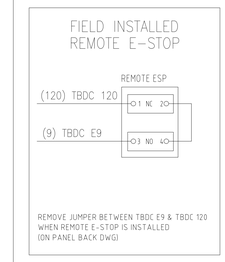

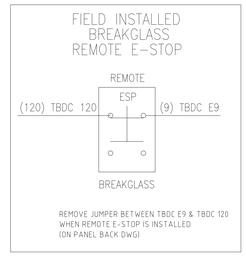

COOLANT HEATER SINGLE PHASE



COOLANT HEATER 3 PHASE

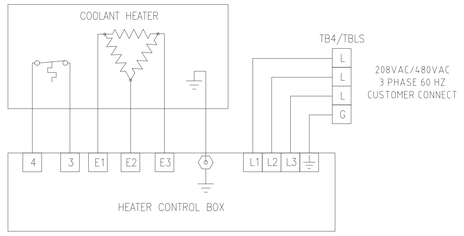

LEGEND:

D1	DIODE 1
D2	DIODE 2
D3	DIODE 3
ESP	EMERGENCY STOP PUSHBUTTON
F4	FUSE ATO 3A
F5	FUSE ATO 3A
SM	STARTER MOTOR
TBAC	TERMINAL STRIP AC CONTROL PANEL
TBDC	TERMINAL STRIP DC CONTROL PANEL
TBLS	LS TERMINAL BLOCK CUSTOMER CONNECT GEN ENCLOSURE
TBLSI	LS TERMINAL BLOCK INTERNAL GEN ENCLOSRE
TBOB	TERMINAL STRIP OUTLET BOX MARATHON
TB1	TERMINAL STRIP 1 CONTROL PANEL
TB4	TERMINAL STRIP 4 CUSTOMER CONNECT
MCP	MASTER CONTROL PANEL

BACNET CONVERTOR

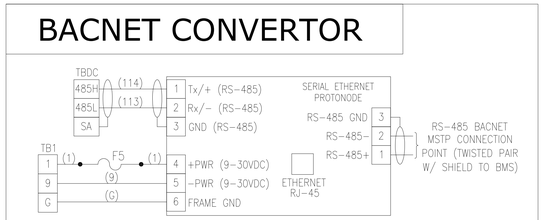

OPTIONAL

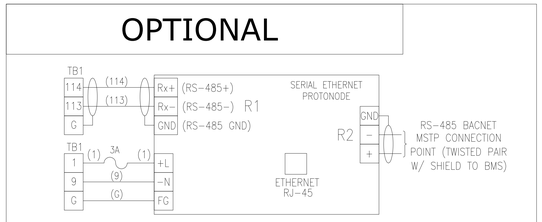

Aenderungsbeschreibung/Description of revision UPDATED NOTE ON PAGE 1 -		kommt vor/Frequency	-
Buchst./Rev.Ltr.	Erh-Antrags-Nr./Promotion Request No.	Aenderungs-Nr./Change Notice No.	Bearbeitungsstatus/Lifecycle
k	PR165329	CN057774	Released

Passmass F4 / Kompass in Deviation sum

Allgemeintoleranzen / General Tolerances ISO 2768-mK nach / as per ISO 2768-1:1989 and ISO 2768-2:1989

Masse / Size ISO 14405 (E) Bauart/Type 1600/1600+	Oberflaechenangaben nach MTN5033 / Surface Specification per MTN5033	Massstab/Scale 1:1	Masse/Mass kg 0.000000
Ausfuehrung u. Lieferung / Tech. Characteristics ----	Allgemeine Fertigungs- vorschriften nach MAN .332 / Production Specification per MAN .332	Werkstoff / Material --------	Format/Size A0
Oberflaechenschutz /Surface Protection ----	Fert.Ber. / Mon. Abt. / Work.Ber. / Ind.Abt. sandhurst 02.03.2026 ---- ----	Halbzeug,Modell,Gesenk / Semifinished Product,Pattern,Die ----	
Verwendbar fuer Typ / Applicable to Model ----			
Projekt-/Auftrags-Nr. / Project/Order No. ----		Material-Nr./Material-No. XZ574K0000009	
Referenz-Nr./Ref.No. ----	Emission ID ----	BCAD Datum/Date Name Benennung/Title --------	
Alle Rechte aus Schutzrechtsanmeldungen vorbehalten. Weitergabe, Vervielfältigung, oder sonstige Verwertung ohne Zustimmung nicht gestattet. Zuwiderhandlungen verpflichten zum Schadenersatz. All industrial property rights reserved. Disclosure, copying, use or for any other purpose is prohibited unless we your express permission is given. Any infringement results in liability to pay damages.		Erstellt/Created 02.03.2026 --- Gepr./Checked 02.03.2026 ramreddy Norm. Change 02.03.2026 kulkarni n Norm. Check 02.03.2026 ramreddy	SYSTEM WAHLW.AUSFUEHRUNGEN SYSTEM 230-600KW S1600
mtu A Rolls-Royce solution Rolls-Royce Solutions GmbH		Zeichnungs-Nr./Drawing No. FDH00000000001204622	Blatt/Sheet 1 /3
		Beschreibung/Description 450-900 kW	

CEM OPTION 3000

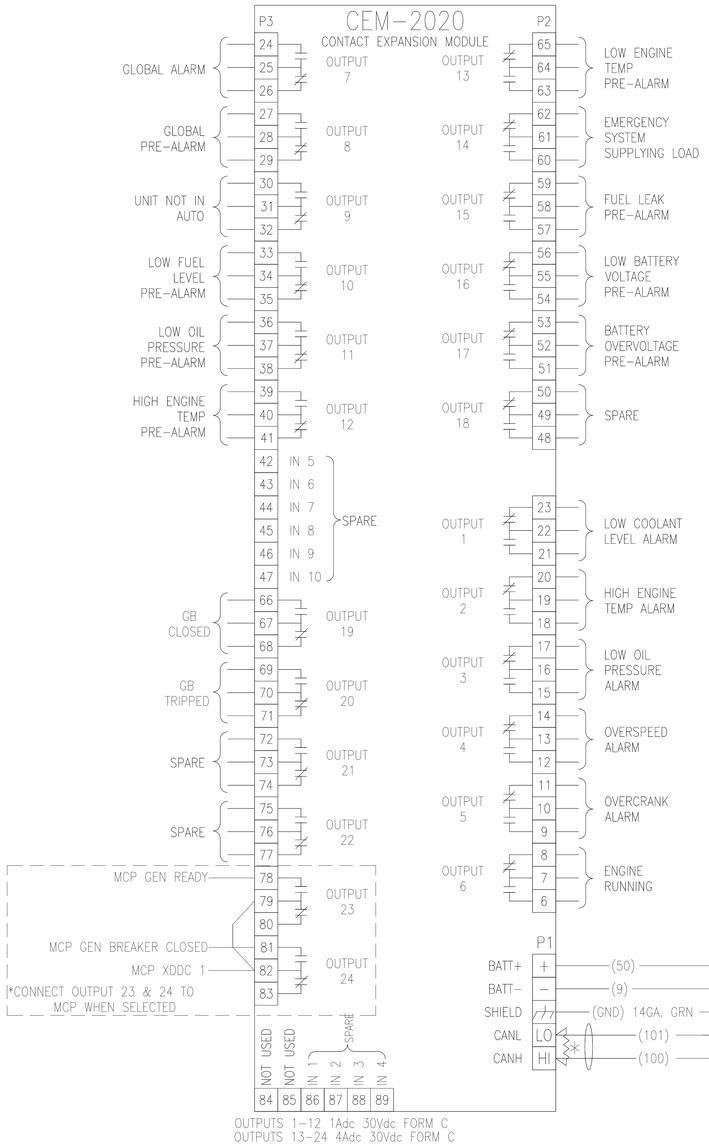

* RESISTOR PLACEMENT:
SINGLE MODULE -1 RESISTOR
2 OR MORE MODULES - ONLY 1 RESISTOR
REMOVE RESISTOR AT TB1 100 AND 101

Aenderungsbeschreibung/Description of revision UPDATED NOTE ON PAGE 1			kommt vor/Frequency
Buchst./Rev.Ltr. k	Erh-Antrags-Nr./Promotion Request No. PR165329	Aenderungs-Nr./Change Notice No. CN057774	Bearbeitungsstatus/Lifecycle Released

Passmass F2 | Abmass in Deviation µm

Allgemeintoleranzen / General Tolerances ISO 2768-mK nach / as per ISO 2768-1:1989 and ISO 2768-2:1989

Masse / Size ISO 14405 (E) Bauart/Type 1600/1600+	Oberflaechenangaben nach MTN5033 Surface Specification per MTN5033	Massstab/Scale 1:1	Masse/Mass 0.000000 kg Format/Size A0
Ausfuehrung u. Lieferung / Tech. Characteristics ----	Allgemeine Fertigungs- vorschriften nach MMN 332 Production Specification per MMN 332	Werkstoff / Material ----------	
Oberflaechenschutz /Surface Protection ----		Halbzeug,Modell,Gesenk / Semifinished Product,Pattern,Die ----	
Verwendbar fuer Typ / Applicable to Model ----	Gef.Ber. Mon. Abs. sandhurst 02.03.2026 Mont.Ber. Inst.Abs. ---- ----		
Projekt-/Auftrags-Nr. / Project/Order No. ----		Material-Nr./Material-No. XZ574K0000009	
Referenz-Nr./Ref.No. ----	Emission ID ----		
Alle Rechte aus Schutzrechtsanmeldungen vorbehalten. Weitergabe, Vervielfältigung, oder sonstige Verwertung ohne Zustimmung nicht gestattet. Zuwiderhandlungen verpflichten zum Schadensersatz. All industrial property rights reserved. Disclosure, reproduction or use for any other purpose is prohibited unless our express permission has been given. Any infringement results in liability to pay damages.	BCAD / Datum/Date / Name Erstellen / Ersetzt ---- ---- Gesch. Change 23.01.2026 kulkarni n Norm. Ersetzt 02.03.2026 ramireddy Gepr. Checked 02.03.2026 ramireddy	Benennung/Title SYSTEM WAHLW.AUSFUEHRUNGEN SYSTEM 230-600KW S1600	
A Rolls-Royce solution Rolls-Royce Solutions GmbH	Zeichnungs-Nr./Drawing No. FDH00000000001204627		Blatt Sheet 2 /3
	Beschreibung/Description 450-900 kW		

BREAKER 1

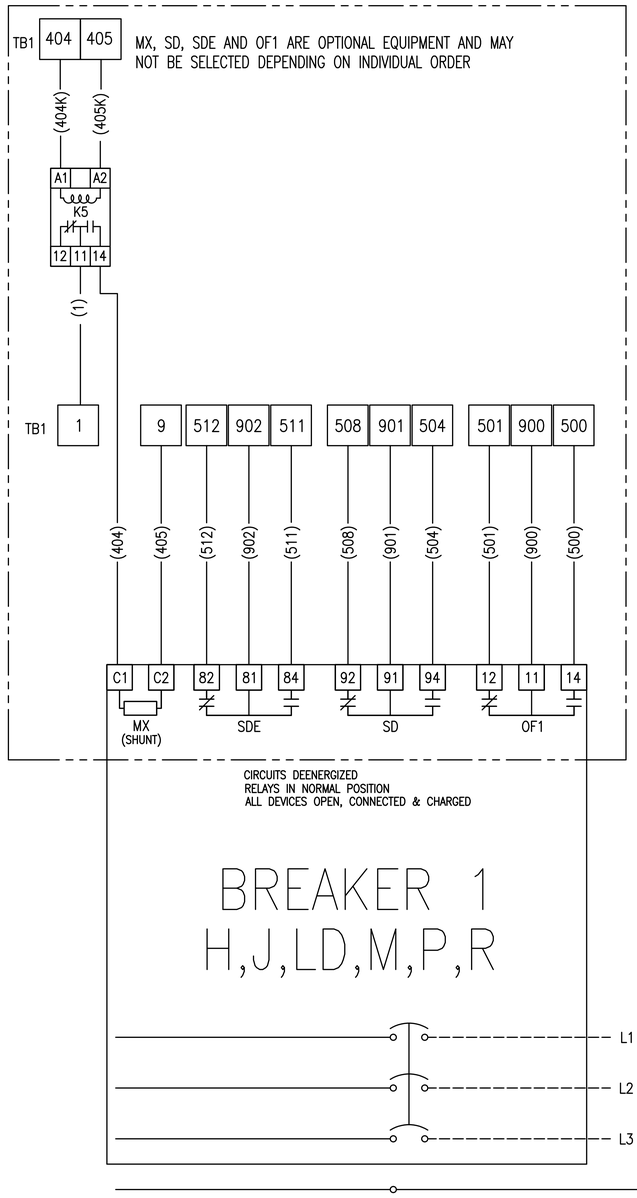

BREAKER 1
H,J,LD,M,P,R

OR

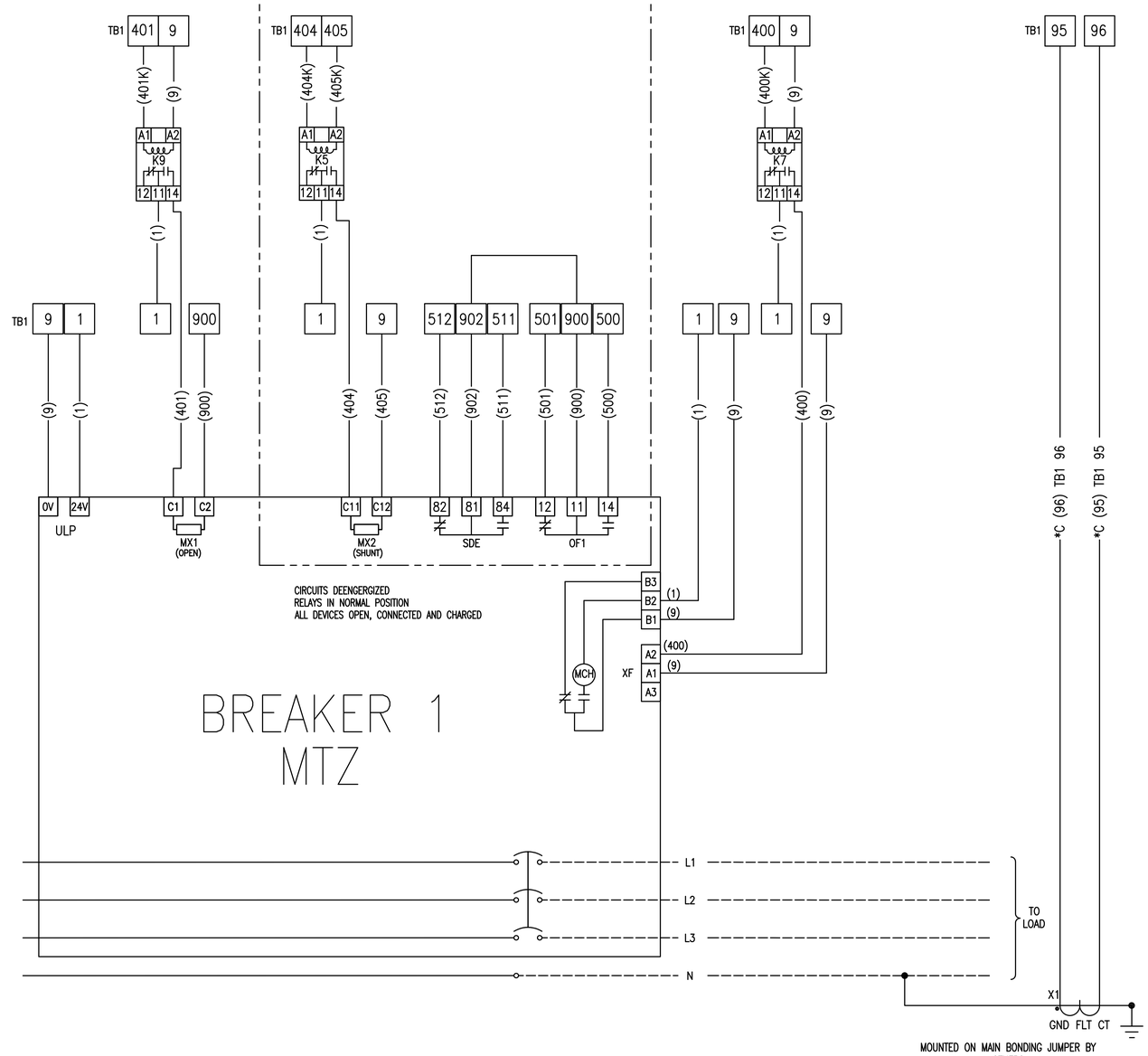

BREAKER 1
MTZ

MOUNTED ON MAIN BONDING JUMPER BY OTHERS

LEGEND

GGS	GENERATOR GROUND STUD
K4	GB UNDERVOLTAGE TRIP RELAY
K5	GB SHUNT TRIP RELAY
K7	GB CLOSE RELAY
K9	GB OPEN RELAY
MN	UNDERVOLTAGE TRIP
MX	SHUNT TRIP
OF1	AUXILIARY SWITCH
SD	ALARM SWITCH
SDE	OVERCURRENT TRIP SWITCH
TB1	TERMINAL BLOCK 1 (PANEL BACK)
TBAC	TERMINAL BLOCK AC (PANEL BACK)

GROUND FAULT CT WIRING CONNECTIONS
MODEL 115-601MR CURRENT TRANSFORMER

CB RATING	CT RATIO	*CT CONNECTIONS
30-230A	50:5	X2-X3
250-450A	100:5	X1-X2
500-700A	150:5	X1-X3
750-900A	200:5	X4-X5
1000-1200A	250:5	X3-X4
1500-1750A	400:5	X1-X4
2000A	450:5	X3-X5
2250A	500:5	X2-X5
2500A	600:5	X1-X5

GROUND FAULT CT WIRING CONNECTIONS
MODEL 115-122MR CURRENT TRANSFORMER

CB RATING	CT RATIO	*CT CONNECTIONS
3000A	600:5	X2-X4
4000A	800:5	X1-X4

Allgemeintoleranzen / General Tolerances ISO 2768-mK
Benennung/Title: ANORDNUNGSZEICHNUNG 11600+ ARRANGEMENT DRAWING
ELECTRICAL SYSTEM DRAWING
Zeichnungs-Nr./Drawing No.: CAD08628070
Beschreibung/Description: 750-900 kW
Blatt/Sheet: 1/6
Material-Nr./Material-No.: XZ57500100073
Änderungsbeschreibung/Description of revision: INITIAL RELEASE
Buchst./Rev.Ltr.: -.10
Erh-Antrags-Nr./Promotion Request No.: PR077798
Aenderungs-Nr./Change Notice No.: ----
Bearbeitungsstatus/Lifecycle: Released
Rolls-Royce Solutions GmbH

P FRAME MOTOR OPERATED/PARALLED

P-FRAME BREAKER WHEN MOTOR OPERATED IS SELECTED BREAKER 1,2 &3

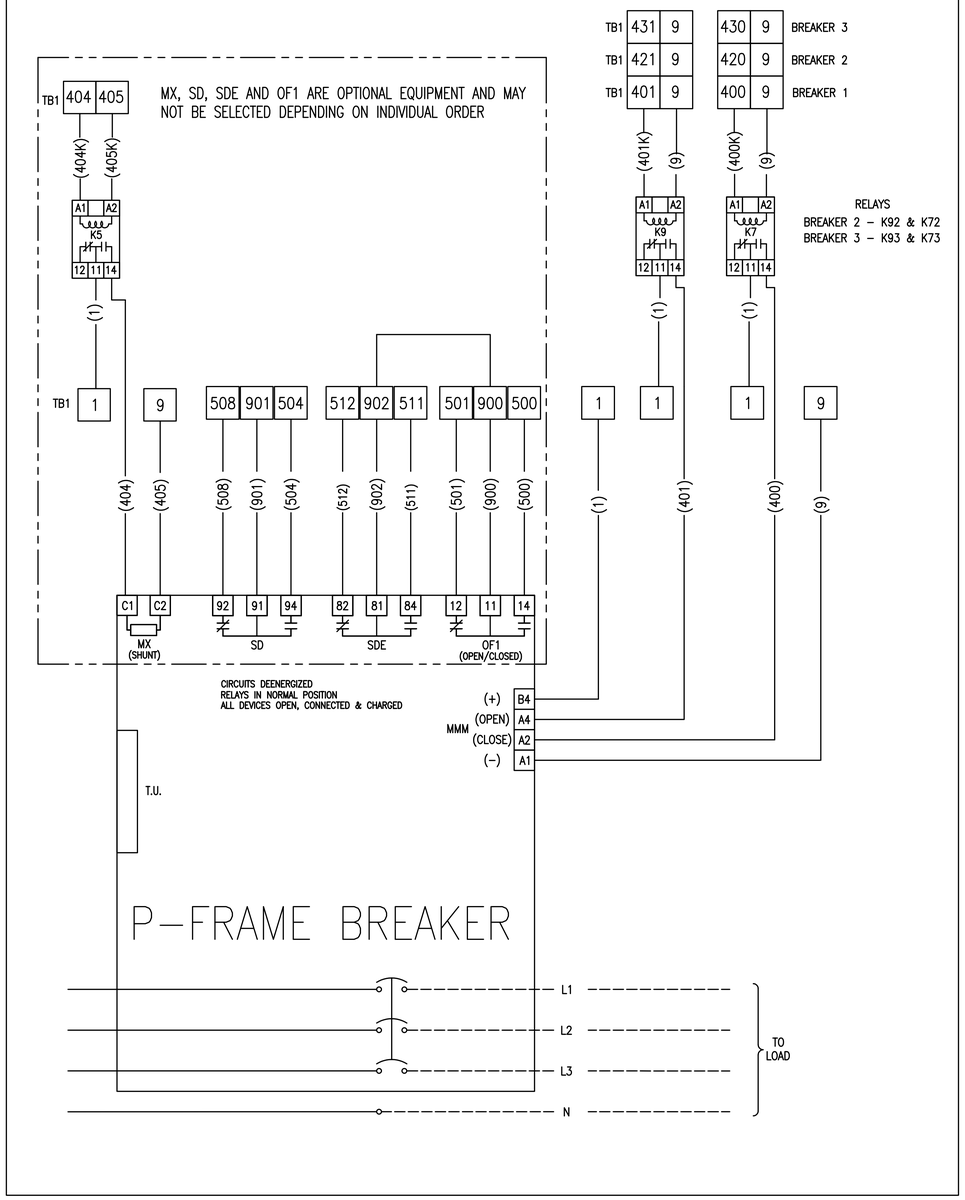

P-FRAME BREAKER WHEN PARALLELING IS SELECTED

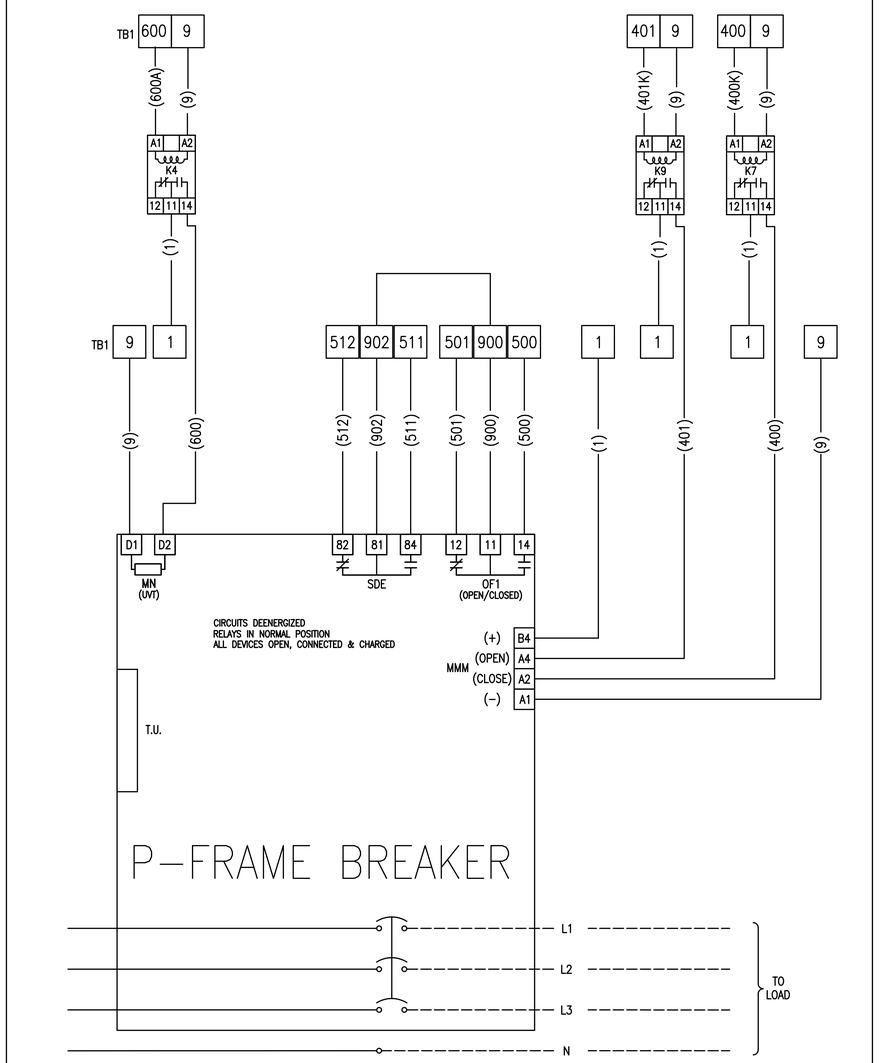

LEGEND

GGS	GENERATOR GROUND STUD
K4	GB UNDERVOLTAGE TRIP RELAY
K5	GB SHUNT TRIP RELAY
K7	GB CLOSE RELAY
K9	GB OPEN RELAY
MN	UNDERVOLTAGE TRIP
MX	SHUNT TRIP
OF1	AUXILIARY SWITCH
SD	ALARM SWITCH
SDE	OVERCURRENT TRIP SWITCH
TB1	TERMINAL BLOCK 1 (PANEL BACK)
TBAC	TERMINAL BLOCK AC (PANEL BACK)

Aenderungsbeschreibung/Description of revision: INITIAL RELEASE

kommt vor/Frequency: KOMMT_VOR

Passmass Fit	Abmass in Deviation µm	Buchst./Rev.Ltr.	Erh-Antrags-Nr./Promotion Request No.	Aenderungs-Nr./Change Notice No.	Bearbeitungsstatus/Lifecycle
		–.8	PR077798	----	Released

Allgemeintoleranzen / General Tolerances ISO 2768-mK

Bauart/Type: 1600+ BREAKER ELECTRICAL DRWG

Oberflaechenangaben nach MTN5033 / Surface Specification per MTN5033

Ausfuehrung u. Lieferung / Tech. Characteristics: ----

Allgemeine Fertigungs- vorschriften nach MMN 332 / Production Specification per MMN 332

Oberflaechenschutz /Surface Protection: ----

Verwendbar fuer Typ / Applicable to Model: ----

Fert.Bev. Wsn. Adv. / Mart.Bev. Inst.Adv.: shaik farh 01.10.2021

Projekt-/Auftrags-Nr. / Project/Order No.: ----

Referenz-Nr./Ref.No.: ----

Emission ID: ----

Alle Rechte aus Schutzrechtsanmeldungen Vorbehalten. Weitergabe, Vervielfältigung, oder sonstige Verwertung ohne Zustimmung nicht gestattet. Zuwiderhandlungen verpflichten zum Schadenersatz. All industrial property rights reserved. Disclosure, reproduction or use for any other purpose is prohibited unless our express permission has been given. Any infringement results in liability to pay damages.

ACAD	Datum/Date	Name
Ersteller Dram.	25.08.2021	groenke do
Geprüft Change	01.10.2021	snaza kurt
Norm. Ges.	01.10.2021	ramireddy
Gepr. Checked	01.10.2021	ramireddy

Rolls-Royce Solutions GmbH

Masse / Size ISO 14405 (E)

Massstab/Scale: MAßSTAB

Masse/Mass: ----

kg

Format/Size: .

Werkstoff / Material: ---------

Halbzeug,Modell,Gesenk / Semifinished Product,Pattern,Die: ----

Material-Nr./Material-No.: XZ57500100073

Benennung/Title: AO Arrangement ANORDNUNGSZEICHNUNG 1600+ ARRANGEMENT DRAWING ELECTRICAL SYSTEM DRAWING

Zeichnungs-Nr./Drawing No.: CAD08628073

Beschreibung/Description: 750-900 kW

Blatt Sheet: 4/6

P FRAME ERMS OPTION

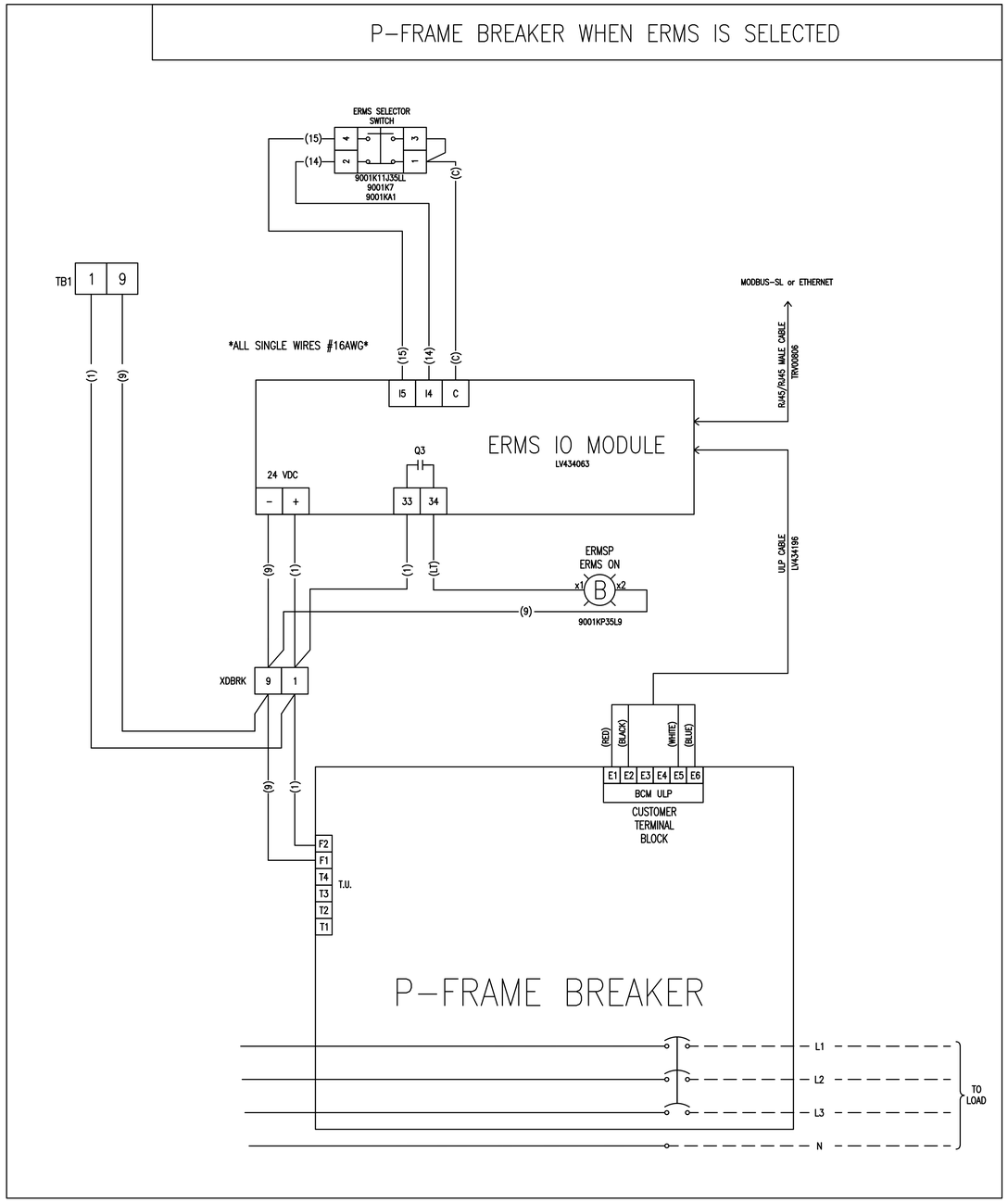

LEGEND

GGS	GENERATOR GROUND STUD
K4	GB UNDERVOLTAGE TRIP RELAY
K5	GB SHUNT TRIP RELAY
K7	GB CLOSE RELAY
K9	GB OPEN RELAY
MN	UNDERVOLTAGE TRIP
MX	SHUNT TRIP
OF1	AUXILIARY SWITCH
SD	ALARM SWITCH
SDE	OVERCURRENT TRIP SWITCH
TB1	TERMINAL BLOCK 1 (PANEL BACK)
TBAC	TERMINAL BLOCK AC (PANEL BACK)

Allgemeintoleranzen / General Tolerances ISO 2768-mK

Bauart/Type: 1600+ BREAKER ELECTRICAL DRAWING

Oberflaechenangaben nach MTN5033 / Surface Specification per MTN5033

Aufnahme u. Lieferung / Tech. Characteristics: ----

Allgemeine Fertigungs- vorschriften nach MMN 332 / Production Specification per MMN 332

Oberflaechenschutz /Surface Protection: ----

Verwendbar fuer Typ / Applicable to Model: ----

Projekt-/Auftrags-Nr. / Project/Order No.: ----

Referenz-Nr./Ref.No.: ----

Emission ID: ----

Masse / Size ISO 14405 (E)

Massstab/Scale: MAßSTAB

Masse/Mass: ----

kg

Format/Size: .

Werkstoff / Material: ---------

Halbzeug,Modell,Gesenk / Semifinished Product,Pattern,Die: ----

Material-Nr./Material-No.: XZ57500100073

ACAD	Datum/Date	Name
Erstellt/Drawn	30.09.2021	groenke do
Geprüft/Checked	01.10.2021	snaza kurt
Norm./Checked	01.10.2021	ramireddy
Gepr./Checked	01.10.2021	ramireddy

Benennung/Title: AO Arrangement

ANORDNUNGSZEICHNUNG 1600+

ARRANGEMENT DRAWING

ELECTRICAL SYSTEM DRAWING

Alle Rechte aus Schutzrechtsanmeldungen vorbehalten. Weitergabe, Vervielfältigung, oder sonstige Verwertung ohne Zustimmung nicht gestattet. Zuwiderhandlungen verpflichten zum Schadensersatz. All industrial property rights reserved. Disclosure, reproduction or use for any other purpose is prohibited unless our express permission has been given. Any infringement results in liability to pay damages.

Aenderungsbeschreibung/Description of revision: INITIAL RELEASE

kommt vor/Frequency: KOMMT_VOR

Buchst./Rev.Ltr.: -.8

Erh-Antrags-Nr./Promotion Request No.: PR077798

Aenderungs-Nr./Change Notice No.: ----

Bearbeitungsstatus/Lifecycle: Released

Passmass Fit | Abmass in Deviation µm

A Rolls-Royce solution

Rolls-Royce Solutions GmbH

Zeichnungs-Nr./Drawing No.: CAD08829131

Beschreibung/Description: 750-900 kW

Blatt Sheet: 6/6

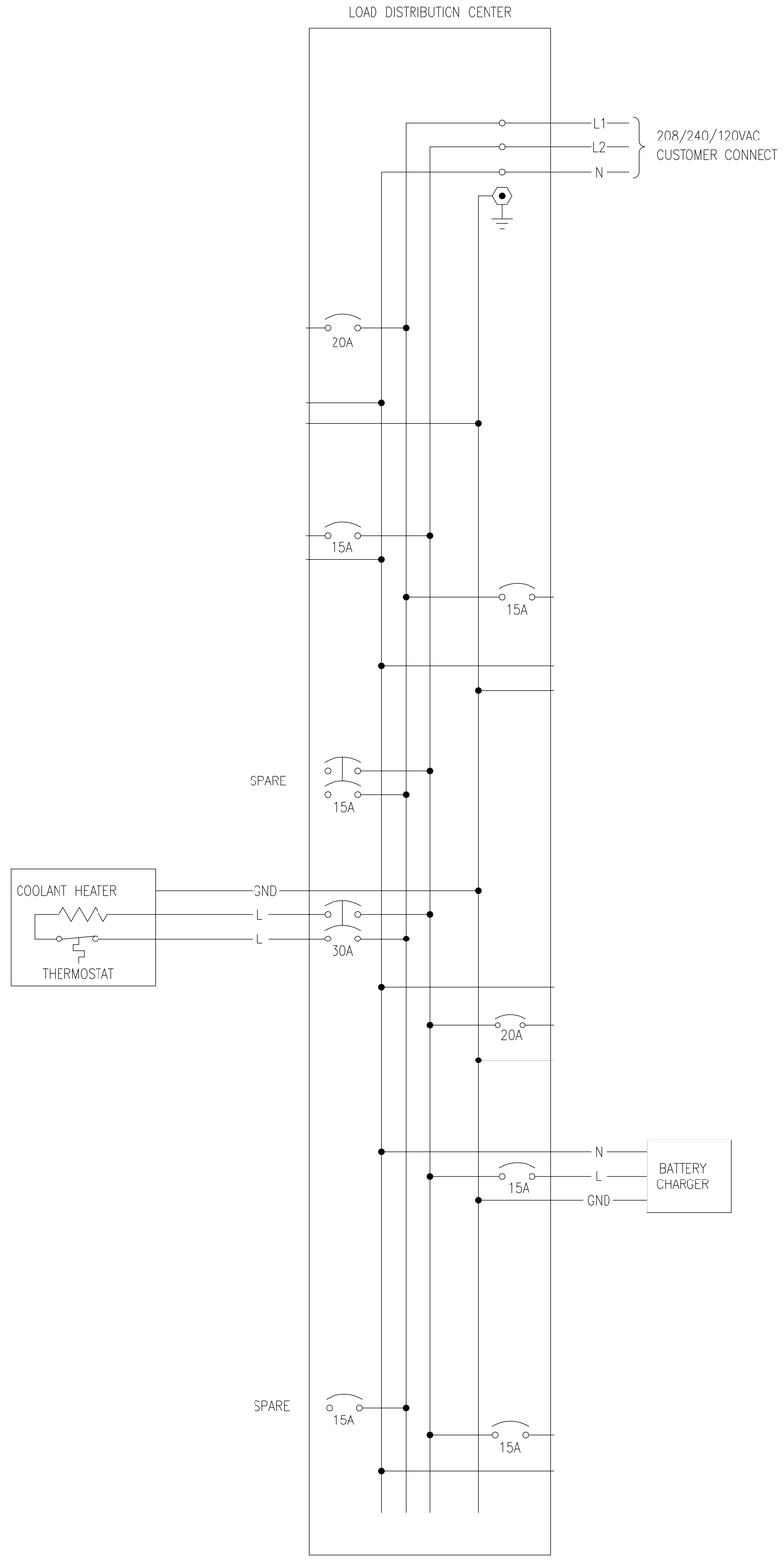

* USE 30A 2P BREAKER WITH 5000 WATT HEATERS
** DO NOT WIRE 480V 1 PHASE OR 3 PHASE HEATERS TO DIST. PANEL

DISTRIBUTION PANEL CIRCUIT BREAKER ARRANGEMENT

SPARE	1	15A	30A	2	COOLANT HTR 208VAC OR 240VAC
	3			4	
GEN STRIP HTR 120VAC	5	15A	20A	6	GFCI CONV RECEP 120VAC
LOUVER MTR 120VAC	7	15A	20A	8	ENCLOSURE HTR 120VAC
ENCLOSURE LTS 120VAC	9	15A	20A	10	SPARE
BATTERY CHGR 120VAC	11	15A	BLANK	12	
	13	BLANK	BLANK	14	

Aenderungsbeschreibung/Description of revision
ADDED CIRCUIT BREAKER ARRANGEMENT DIAGRAM, UPDATED DEVICE NAMES AND LABELS, BATT CHRGR TO 15A CB, REMOVED DUPLICATE DIAGRAM FOR ENCLOSURE LIGHTS

kommt vor/Frequency KOMMT_VO

Passmass Fit	Abmass in Deviation µm	Buchst./Rev.Ltr.	Erh-Antrags-Nr./Promotion Request No.	Aenderungs-Nr./Change Notice No.	Bearbeitungsstatus/Lifecycle
		d.11	PR147094	CN052319	Released

Allgemeintoleranzen / General Tolerances ISO 2768-mK

Bauart/Type: DISTRIBUTION PANEL

Ausfuehrung u. Lieferung / Tech. Characteristics: ----

Oberflaechenschutz /Surface Protection: ----

Verwendbar fuer Typ / Applicable to Model: ----

Projekt-/Auftrags-Nr. / Project/Order No.: ----

Referenz-Nr./Ref.No.: ----

Emission ID: ----

Oberflaechenangaben nach MTN5033 Surface Specification per MTN5033

Allgemeine Fertigungs- vorschriften nach MMN 332 Production Specification per MMN 332

Fert.Ber. Man. Adv. / Mont.Ber. Inst.Adv.: block kevi 11.12.2024 ---- ----

Masse / Size ISO 14405 (E)

Massstab/Scale: MABSTAB

Masse/Mass: 0.000000 kg

Format/Size: A2

Werkstoff / Material: ----

Halbzeug,Modell,Gesenk / Semifinished Product,Pattern,Die: ----

Material-Nr./Material-No.: XZ574K0000003

ACAD	Datum/Date	Name
Erstellen Gezeichnet	----	----
Gesch. Change	10.12.2024	witte dohn
Norm. Std.	11.12.2024	siebert jo
Gepr. Checked	11.12.2024	siebert jo

Benennung/Title: ----

SYSTEM 1600/1600+

SYSTEM ELECTRICAL SYSTEM DRAWING

Alle Rechte aus Schutzrechtsanmeldungen sowie Verwertung oder Verwendung, oder Zustimmung nicht gestattet. Zuwiderhandlungen verpflichten zum Schadensersatz.
All industrial property rights reserved. Disclosure, reproduction or use for any other purpose is prohibited unless our express permission has been given. Any infringement results in liability to pay damages.

A Rolls-Royce solution
Rolls-Royce Solutions GmbH

Zeichnungs-Nr./Drawing No.: FDH00000000001204594

Beschreibung/Description: 450-900 kW

Blatt Sheet: 1/1

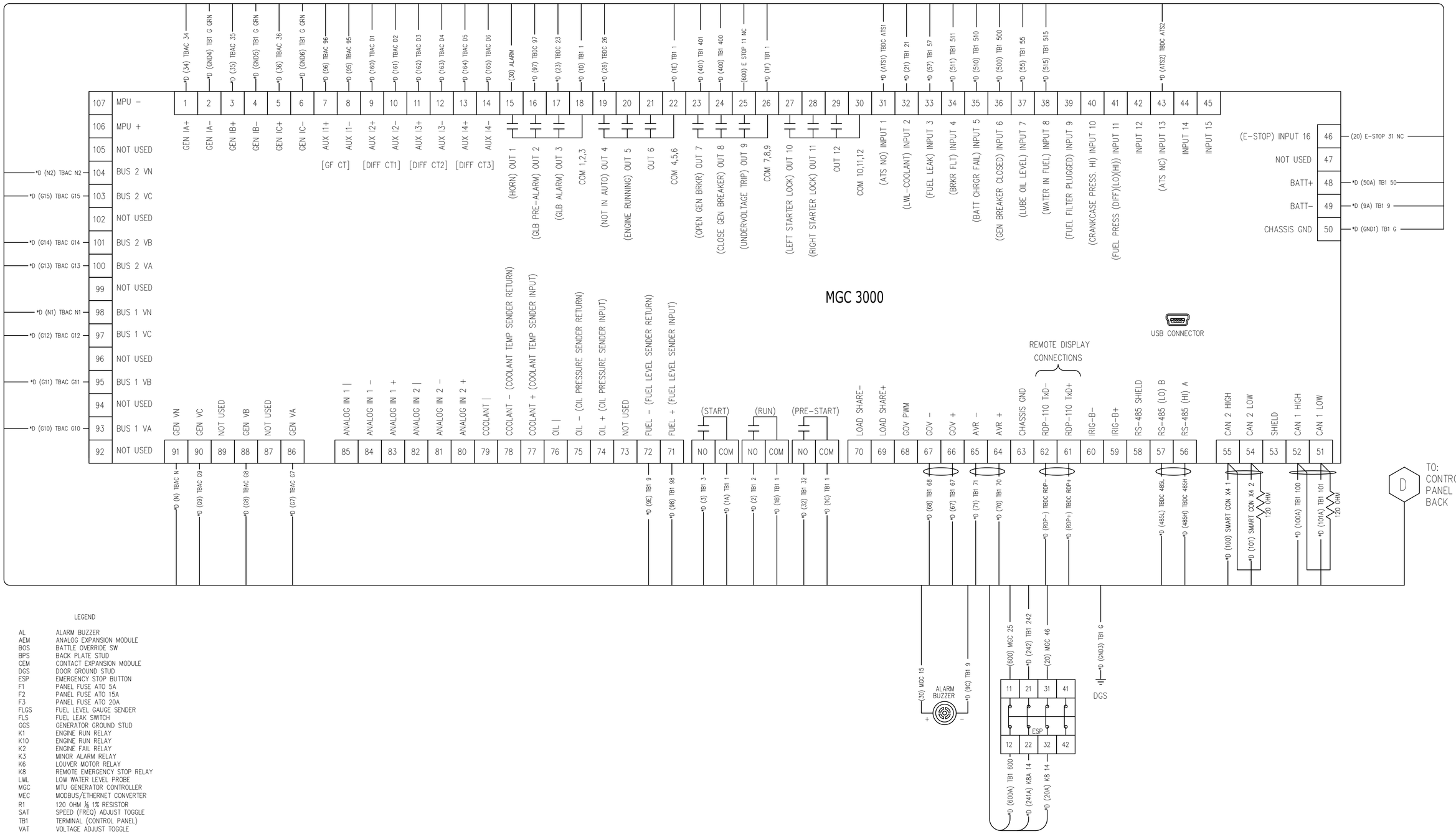

LEGEND

AL	ALARM BUZZER
AEM	ANALOG EXPANSION MODULE
BOS	BATTLE OVERRIDE SW
BPS	BACK PLATE STUD
CEM	CONTACT EXPANSION MODULE
DGS	DOOR GROUND STUD
ESP	EMERGENCY STOP BUTTON
F1	PANEL FUSE ATO 5A
F2	PANEL FUSE ATO 15A
F3	PANEL FUSE ATO 20A
FLGS	FUEL LEVEL GAUGE SENDER
FLS	FUEL LEAK SWITCH
GGS	GENERATOR GROUND STUD
K1	ENGINE RUN RELAY
K10	ENGINE RUN RELAY
K2	ENGINE FAIL RELAY
K3	MINOR ALARM RELAY
K6	LOUVER MOTOR RELAY
K8	REMOTE EMERGENCY STOP RELAY
LWL	LOW WATER LEVEL PROBE
MGC	MTU GENERATOR CONTROLLER
MEC	MODBUS/ETHERNET CONVERTER
R1	120 OHM ½ 1% RESISTOR
SAT	SPEED (FREQ) ADJUST TOGGLE
TB1	TERMINAL (CONTROL PANEL)
VAT	VOLTAGE ADJUST TOGGLE

*X (X) XXX X	
*X	DRAWING DESTINATION
(X)	WIRE NUMBER
XXX	DESTINATION
X	DESTINATION TERMINAL

NOTE:

1. WIRE NUMBERS ARE IN PARENTHESIS
2. WIRING is #20 GA. UNLESS OTHERWISE SPECIFIED
3. SHORT DASHED LINES (------) INDICATE CUSTOMER CONNECTION
4. S2000 USES SINGLE BEARING RTD AND S4000 USES DOUBLE BEARING RTDS

Allgemeintoleranzen / General Tolerances ISO 2768-mK
Oberflaechenangaben nach MTN5033 / Surface Specification per MTN5033
Allgemeine Fertigungs- vorschriften nach MAN 333 / Production Specification per MAN 333
Oberflaechenschutz / Surface Protection
Verwendbar fuer Typ / Applicable to Model
Projekt-/Auftrags-Nr. / Project/Order No.
Referenz-Nr./Ref.No. | Emission ID

Maßstab / Size ISO 14405
Oberflaechenangaben nach MTN5033 / Surface Specification per MTN5033: Maßstab/Scale MABSTAB; Masse/Mass; kg| Format/Size
Werkstoff / Material
Halbzeug,Modell,Gesenk / Semifinished Product,Pattern,Die
Material-Nr./Material-No. XZ57464400002
Benennung/Title: ANORDNUNGSZEICHNUNG / ARRANGEMENT DRAWING
Zeichnungs-Nr./Drawing No. CAD06937784
Beschreibung/Description 450-900 kW
Blatt/Sheet 1/2

ACAD	Datum/Date	Name
Erstellt/Created	04.11.2020	shaik farh
Geprüft/Checked	06.12.2021	shaik farh
Norm.	04.01.2022	ramireddy
Freig./Released	04.01.2022	ramireddy

Buchst./Rev.Ltr. b.3 | Erh-Antrags-Nr./Promotion Request No. PR080979 | Aenderungs-Nr./Change Notice No. CN030643 | Bearbeitungsstatus/Lifecycle Released

Aenderungsbeschreibung/Description of revision: ADD A NOTE TO CONNECT TB1 9 TO MCP XDDC 9 WHEN SELECTED ON PAGE 2
kommt vor/Frequency KOMMT_VOR

Assemmass Abmass an Pit / Deviation jam

Alle Rechte aus Schutzrechtsanmeldungen Vorbehalten. Weitergabe, Vervielfältigung, oder Verwertung des Inhalts ohne Genehmigung nicht gestattet. Zuwiderhandlungen verpflichten zum Schadenersatz. All industrial property rights reserved. Disclosure, reproduction or use for any other purpose is prohibited unless our expritis permission has been given. Any infringement results in liability to pay damages.

A Rolls-Royce solution
Rolls-Royce Solutions GmbH

TO: CONTROL PANEL DOOR

D

A — TO: ENGINE X1 HARNESS

B — TO: ENGINE HARNESS

C — TO: GENERATOR HARNESS

E — TO: ENGINE ACCESSORIES

SMART CONNECT

X7 X5

X1 POWER: GND, BATT+, BATT−

X2 RS485: B, A, GND

X3 CAN1: H, L, GND

X4: H, L, GND

*D (100) MGC 55

*D (101) MGC 54

BPS

*C (GND1) GGS #10 GA GRN

*D (GND3) DGS #12 GA GRN

(GND2) TB1 G #12 GA GRN

*B (GND4) ENG. BLOCK #10 GA GRN

(GND8) TB1 GND

(1J) TB1 1

(9D) TB1 9

(201) TB1 201

(202) TB1 202

(205) TB1 205

(206) TB1 206

100 101 — 120 OHM 52 — 51

K8 A1 A2 12 11 14

K8A A1 A2 12 11 14

(1K) TB1 1

(120) TBDC 120

*D (100A) MGC 52

*D (101A) MGC 51

(9B) TB1 9

*E (20A) ESP 32

(241) TB1 241

*D (241A) ESP 22

TB1: (50) TB1 50 #16 GA; (1) TB1 1 #16 GA; (51) TB1 51 #12 GA; (50) F5A; *D (50A) MGC 48; (51) F20A #12 GA; (1) TB1 F15A #6 GA; *D (1A) MGC START C; *D (1B) MGC RUN C; *D (1C) MGC PRE C; *D (1D) MGC 18; *D (1E) MGC 22; *D (1F) MGC 26; (1J) SMART CON X1 2; (1K) K8 A1; *D (GND1) MGC 50; (GND2) BPS #12GA. GRN; *D (GND4) MGC 2; *D (GND5) MGC 4; *D (GND6) MGC 6; (GND8)SMART CON X1 1; *D (9) MGC 72; *D (9A) MGC 49; (9B) K8 11; *D (9C) ALARM−; (9D) SMART CON X1 3; (9E) TB1 900; (E9) TBDC E9; *B (9A) SM− #12 GA; *B (9B) SM− #12 GA; D1 D2; *D (2) MGC RUN NO; *D (3) MGC START NO; *D (32) MGC PRE NO; *D (67) MGC 66; *D (68) MGC 67; *D (69) MGC 64; *D (70) MGC 65; *D (71) MGC 65; *D (55) MGC 37; (241) K8A 11; *D (242) ESP 21; *D (21) MGC 32; *D (510) MGC 35; *D (57) MGC 33; *D (98) MGC 71; *D (515) MGC 38; (201) SC X3 1; (202) SC X3 2; (205) SC X4 1; (206) SC X4 2; *D (600A) ESP 12; *D (511) MGC 34; *D (400) MGC 24; *D (401) MGC 23; *D (500) MGC 36; (9E) TB1 9

TB1: F5A F15A F20A 48 50 51 51 1 1 1 C C C 9 9 9 9 9 9 9 9 9 9 2 2 3 33 32 S 68 67 70 71 67 168 69 170 171 55 217 219 233 234 241 242 21 510 57 98 515 201 202 203 204 205 206 600 511 400 401 500 501 900

*A (201) ECU X1 1 WHT; *A (202) ECU X1 2 BLK; *A (203) ECU X1 5 BRN; *A (204) ECU X1 8 BRN; *A (205) ECU X1 3 WHT; *A (206) ECU X1 4 BLK

(48) TB1 48 #12 GA; (48) F20A 48 #12 GA; *B (48) SMC #12 GA; *A (302) ECU X1 59 RED; *A (303) ECU X1 58 RED; *A (304) ECU X1 62 RED; *B (1A) LWL #16 GA; (GND7) TB1 S; *A (GND) ECU; *A (212) ECU X1 29; *A (210) ECU X1 33; *A (218) ECU X1 17; *A (214) ECU X1 25; *A (222) ECU X1 9; *A (220) ECU X1 13; *A (306) ECU X1 61 BLK; *A (305) ECU X1 57 BLK; *A (307) ECU X1 60 BLK; *B (90) LWL #16 GA; *B (9) WH A1; *B (2) WH A2; *B (2) ALTERNATOR; *B (3) SMC; *A (221) ECU X1 10; *A (209) ECU X1 34; (GND7) TB1 G; *A (239) ECU X1 46; *A (225) ECU X1 42; *C (70) GEN VR+; *C (71) GEN VR−; *A (211) ECU X1 50; *A (219) ECU X1 26; *A (213) DVR PIN 3; *C (170) DVR PIN 4; *C (171) DVR PIN 2; *A (217) ECU X1 18; *A (219) ECU X1 14; *A (233) ECU X1 19; *A (234) ECU X1 16; *A (241) ECU X1 32; *A (242) ECU X1 31; *B (21) LWL #16 GA

CONNECT TB1 9 TO MCP XDDC 9 WHEN SELECTED

REMOVE JUMPER FOR ALT. START

TBAC: G7 G8 G9 N G10 G11 G12 N1 G13 G14 G15 N2 34 35 36 95 96 D1 D2 D3 D4 D5 D6

*D (G7) MGC 86; *D (G8) MGC 88; *D (G9) MGC 90; *D (N) MGC 91; *D (G10) MGC 93; *D (G11) MGC 95; *D (G12) MGC 97; *D (N1) MGC 98; *D (G13) MGC 100; *D (G14) MGC 101; *D (G15) MGC 103; *D (N2) MGC 104; *D (34) MGC 1; *D (35) MGC 3; *D (36) MGC 5; *D (95) MGC 8; *D (96) MGC 7; *D (160) MGC 9; *D (161) MGC 10; *D (162) MGC 11; *D (163) MGC 12; *D (164) MGC 13; *D (165) MGC 14

*C (G7) F1 #6 GA; *C (G8) F2 #6 GA; *C (G9) F3 #6 GA; *C (N) N #6 GA

*C (34) CT1 X1 166A; *C (35) CT2 X1 166A; *C (36) CT3 X1 166A

REMOVE JUMPER(s) WHEN CT(s) INSTALLED

TBDC: 23 26 97 RDP+ RDP− SA 485L 485H ATS2 ATS1 ATSC E9 120

*D (23) MGC 17; *D (26) MGC 19; *D (97) MGC 16; *D (RDP+) MGC 61; *D (RDP−) MGC 62; *D (485L) MGC 57; *D (485H) MGC 56; *D (ATS2) MGC 43; *D (ATS1) MGC 31; (E9) TB1 9; (120) K8 A2

NOT IN AUTO

RDP-110

MODBUS 485

REMOTE START (NON REQUESTING STATE)

REMOTE E-STOP

REMOVE JUMPER WHEN REMOTE E-STOP IS INSTALLED

LEGEND:

AEM	ANALOG EXPANSION MODULE
AL	ALARM BUZZER
ALT	ENGINE ALTERNATOR
BC	BATTERY CHARGER
BFB	BREAKER FUSE BLOCK
BPS	BACK PANEL STUD
CEM	CONTACT EXPANSION MODULE
MGC	DIGITAL GENSET CONTROLLER
DGS	DOOR GROUND STUD
DVR	DIGITAL VOLTAGE REGULATOR
ECUS	ENGINE CONTROL UNIT STUD
ESP	EMERGENCY STOP BUTTON
F4–10	FUSES 15 AMP
F5A	FUSE 5 AMP
F15A	FUSE 15 AMP
F20A	FUSE 20 AMP
FLGS	FUEL LEVEL GAUGE SENDER
FLS	FUEL LEAK SWITCH
FWS	FUEL WATER SEPARATOR
GB	GENERATOR BREAKER
GF	GROUND FAULT
GGS	GENERATOR GROUND STUD
K1	ENGINE RUN RELAY
K2	ENGINE FAIL RELAY
K3	MINOR ALARM RELAY
K4	UNDER VOLTAGE TRIP RELAY
K5	SHUNT TRIP RELAY
K6	LOUVER MOTOR RELAY
K7	CLOSE BREAKER RELAY
K8 & K8A	E-STOP RELAY
K9	OPEN BREAKER RELAY
LSM	LOAD SHARE MODULE
MMM	MOTOR MECHANISM MODULE
MN	UNDERVOLTAGE SHUNT TRIP(NC)
MX	SHUNT TRIP (NO)
OF	BREAKER AUX SWITCH
PT	PARALLELING TRANSFORMER
R1–3	RESISTOR 120 OHM ½ W
SAT	SPEED (FREQ) ADJUST TOGGLE
SC	SMART CONNECT
SDE	BELL ALARM
SM	STARTER MOTOR
SMC	STARTER MOTOR COIL
TB1	TERMINAL (CONTROL PANEL)
TBAC	AC CONNECTION TERMINAL
TBCC	DC CONNECTION TERMINAL
TU	MIRCO–LOGIC TRIP UNIT
VAT	VOLTAGE ADJUST TOGGLE
WH	WATER HEATER
MCP	MASTER CONTROL PANEL

NOTES:
1. WIRE NUMBERS ARE IN PARENTHESIS.
2. WIRING IS #20 GA. UNLESS OTHERWISE SPECIFIED.
3. CONTROL PANEL WIRING IS #20 GA. UNLESS OTHERWISE SPECIFIED.
4. SHORT DASHED LINES (------) INDICATE OPTIONAN EQUIPMENTS WIRING.
5. TOP NUMBER ON TB1 INDICATES TOP DECK, BOTTOM NUMBER INDICATES BOTTOM DECK.

*X (X) XXX X
*X DRAWING DESTINATION
(X) WIRE NUMBER
XXX DESTINATION
X DESTINATION TERMINAL

Aenderungsbeschreibung/Description of revision: ADD A NOTE TO CONNECT TB1 9 TO MCP XDDC 9 WHEN SELECTED ON PAGE 2

kommt vor/Frequency: KOMMT_VOR

Buchst./Rev.Ltr.	Erh-Antrags-Nr./Promotion Request No.	Aenderungs-Nr./Change Notice No.	Bearbeitungsstatus/Lifecycle
b.4	PR080979	CN030643	Released

Passmass Abmass in Fill / Deviation µm

Alle Rechte aus Schutzrechtsanmeldungen. Jede unbefugte Weitergabe, Vervielfältigung, oder sonstige Verwertung ohne unsere ausdrückliche Zustimmung nicht gestattet. Zuwiderhandlungen verpflichten zum Schadenersatz.
All industrial property rights reserved. Disclosure, reproduction or use for any other purpose is prohibited unless our express permission has been given. Any infringement results in liability to pay damages.

A Rolls-Royce solution
Rolls-Royce Solutions GmbH

Allgemeintoleranzen / General Tolerances ISO 2768-mK

Benennung/Type: MCC 3000 S1600/1600+

Auswahlmerkmal u. Lieferung / Tech. Characteristics: ----

Oberflaechenschutz /Surface Protection: ----

Verwendbar fuer Typ / Applicable to Model: ----

Projekt-/Auftrags-Nr. / Project/Order No.: ----

Referenz-Nr./Ref.No.: ----

Emission ID: ----

Oberflaechenangaben nach WTN5033 / Surface Specification per WTN5033

Allgemeine Fertigungs- vorschriften nach WAN 332 / Production Specification per WAN 332

	Name	Datum/Date
Ers./Part Ser.	sandhurst	Mai.2022
Werk Ber./Inst.Adv.	----	----

	Name	Datum/Date
ACAD		
Ersteller/Drawn	shaik farh	04.11.2020
Aend./Change	shaik farh	06.12.2021
Norm.	ramreddy	04.01.2022
Gep./Checked	ramreddy	04.01.2022

Masse / Size ISO 14405 (E)

Massstab/Scale: MABSTAB

Masse/Mass: kg ---- Format/Size: .

Werkstoff / Material: ----

Halbzeug,Modell,Gesenk / Semifinished Product,Pattern,Die: ----

Material-Nr./Material-No.: XZ57464400002

Benennung/Title: ANORDNUNGSZEICHNUNG / ARRANGEMENT DRAWING

Zeichnungs-Nr./Drawing No.: CAD06937785

Beschreibung/Description: 450–900 kW

Blatt/Sheet: 2/2

CUSTOMER CONNECTIONS
BREAKER OPTIONS

SD = BELL ALARM (ALARM SWITCH)
SDE = BELL ALARM (OVERCURRENT TRIP SWITCH)
OF1 = AUX SWITCH

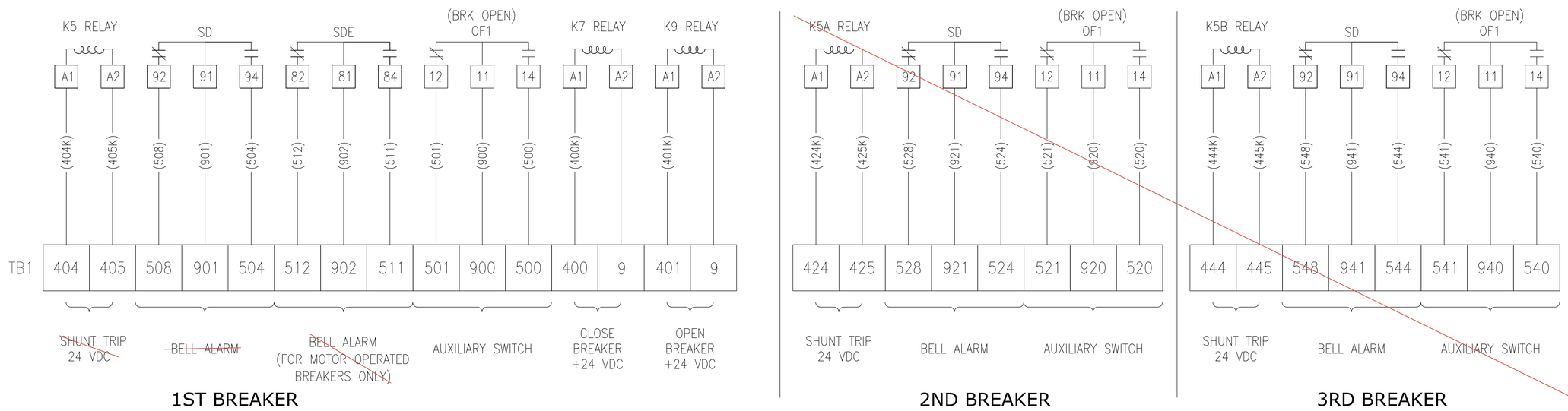

NOTES:

1. WIRE NUMBERS ARE IN PARENTHESIS.
2. SHORT DASHED LINES (------) INDICATE CUSTOMER CONNECTION OR OPTIONAL EQUIPMENT.

Allgemeintoleranzen / General Tolerances ISO 2768-mK	Massstab/Scale: MABSTAB	Masse/Mass: 0.000000 kg	Format/Size: A2
Baustyp: CUSTOMER CONNECTIONS	Oberflaechenangaben nach MTN5033 / Surface Specification per MTN5033		
Ausfuehrung u. Lieferung / Tech. Characteristics: ----	Allgemeine Fertigungs- vorschriften nach MAN 332 / Production Specification per MAN 332	Werkstoff / Material: ----------	
Oberflaechenschutz /Surface Protection: ----		Holzzeug,Modell,Gesenk / Semifinished Product,Pattern,Die: ----	
Verwendbar fuer Typ / Applicable to Model: ----	Fert.Bez. Man. Adv. / Mont.Bez. Ind.Adv.: block kevi 10.12.2024		
Projekt-/Auftrags-Nr. / Project/Order No.: ----		Material-Nr./Material-No.: XZ574K0000002	
Referenz-Nr./Ref.No.: ----	Emission ID: ----		
Alle Rechte aus Schutzrechtsanmeldungen Mitbehalten. Weitergabe, Vervielfältigung, oder sonstige Verwertung ohne Zustimmung nicht gestattet. Zuwiderhandlungen verpflichten zum Schadensersatz. All industrial property rights reserved. Disclosure, reproduction or use for any other purpose is prohibited unless our express permission has been given. Any infringement results in liability to pay damages.	ACAD / Datum/Date / Name: Erstellen / Drawn: 09.12.2024 witte dohn; Geprüft / Approved: 10.12.2024 siebert jo; Verf. / Checked: 10.12.2024 siebert jo	Benennung/Title: ARRANGEMENT DRAWING	
Aenderungsbeschreibung/Description of revision: UPDATED AC OPTIONS CUSTOMER CONNECTIONS	kommt vor/Frequency: KOMMT_VOR		
Buchst./Rev.Ltr.: d.8	Erh-Antrags-Nr./Promotion Request No.: PR144658	Aenderungs-Nr./Change Notice No.: CN052319	Bearbeitungsstatus/Lifecycle: Released
Passmass Fit / Abmass in Deviation µm			
Zeichnungs-Nr./Drawing No.: FDH00000000001204593	Beschreibung/Description: 450-900 kW	Blatt Sheet: 1/1	

A Rolls-Royce solution
Rolls-Royce Solutions GmbH

UNITED STATES ENVIRONMENTAL PROTECTION AGENCY
2026 MODEL YEAR
CERTIFICATE OF CONFORMITY
WITH THE CLEAN AIR ACT

OFFICE OF TRANSPORTATION AND AIR QUALITY
ANN ARBOR, MICHIGAN 48105

Certificate Issued To: **Rolls-Royce Solutions America Inc**
(U.S. Manufacturer or Importer)

Certificate Number: TMDDL22.4ZWR-002

Effective Date: 09/23/2025

Expiration Date: 12/31/2026

Byron J. Bunker, Division Director
Compliance Division

Issue Date: 09/23/2025

Revision Date: N/A

Model Year: 2026
Manufacturer Type: Original Engine Manufacturer
Engine Family: TMDDL22.4ZWR

Mobile/Stationary Indicator: Stationary
Emissions Power Category: kW>560
Fuel Type: Diesel
After Treatment Devices: No After Treatment Devices Installed
Non-after Treatment Devices: Electronic Control

Pursuant to Section 111 and Section 213 of the Clean Air Act (42 U.S.C. sections 7411 and 7547) and 40 CFR Part 60, and subject to the terms and conditions prescribed in those provisions, this certificate of conformity is hereby issued with respect to the test engines which have been found to conform to applicable requirements and which represent the following engines, by engine family, more fully described in the documentation required by 40 CFR Part 60 and produced in the stated model year.

This certificate of conformity covers only those new compression-ignition engines which conform in all material respects to the design specifications that applied to those engines described in the documentation required by 40 CFR Part 60 and which are produced during the model year stated on this certificate of the said manufacturer, as defined in 40 CFR Part 60.

It is a term of this certificate that the manufacturer shall consent to all inspections described in 40 CFR 1068 and authorized in a warrant or court order. Failure to comply with the requirements of such a warrant or court order may lead to revocation or suspension of this certificate for reasons specified in 40 CFR Part 60. It is also a term of this certificate that this certificate may be revoked or suspended or rendered void *ab initio* for other reasons specified in 40 CFR Part 60.

This certificate does not cover engines sold, offered for sale, or introduced, or delivered for introduction, into commerce in the U.S. prior to the effective date of the certificate.

Water Heater Data Sheet

CB, CL, and WL Series

The CB, CL, and WL tank-style engine heaters are designed to preheat diesel and gas engines in generator set applications. With easy start-up regardless of ambient temperature, they feature a built-in thermostat and heat engines from 6L to 25L displacement. Thermosiphon circulation of the coolant delivers heat throughout the entire engine for optimum performance.



CB Model with Thermostat

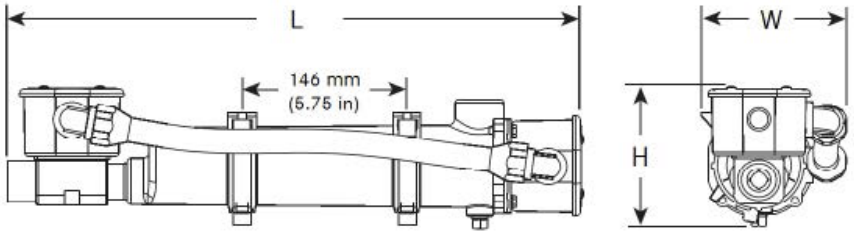

CB Model



CL Model with Thermostat

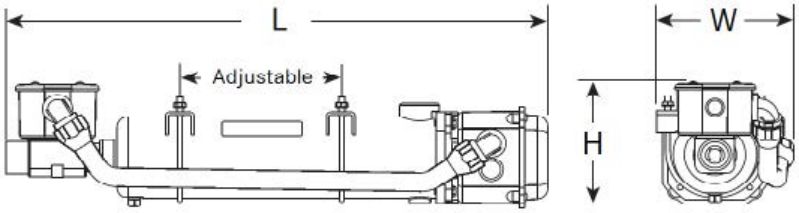

CL Model



WL Model with Thermostat

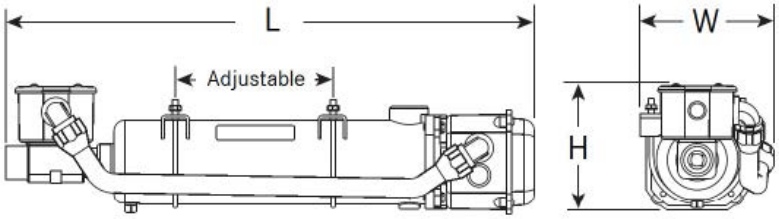

WL Model

CERTIFICATIONS AND STANDARDS

- CB and CL Models: c-UL-us Listed, CSA Certified, and CE Compliant
- WL Model: CE Compliant

SPECIFICATIONS

	CB Model	CL Model	WL Model
Height:	132 mm (5.2 in)	147 mm (5.8 in)	147 mm (5.8 in)
Length:	510 mm (20.1 in)	597 mm (23.5 in)	597 mm (23.5 in)
Width:	129 mm (5.1 in)	158 mm (6.2 in)	158 mm (6.2 in)
Weight:	3 kg (6.9 lb)	4.5 kg (10 lb)	4.5 kg (10 lb)

A Rolls-Royce solution

SPECIFICATIONS, continued

- Heating Fluid: Engine coolant (50% glycol/50% water)
- Power: 1.5, 2, 2.5, 3, 4, and 5 kW
- Rated Voltage: 120V – 575V
- Phase: 1 and 3
- Enclosure: IP44
- Fluid Capacity:
  - CL and WL Models: 2 L (0.5 gal)
  - CB Models: 1.2 L (0.3 gal)
- Max Pressure: 8.61 bar (125 psi)
- Inlet / Outlet: 1" NPT Male / 1" NPT Female
- Thermostat Range:
  - On: 38 °C (100 °F)
  - Off: 49 °C (120 °F)

Model Number	*mtu* Part Number	Watts	Volts	Phase	Hz	Amps
CB115410-200	SUA98952	1,500	480	1	60	3.1
CB120210-200	SUA98996	2,000	240	1	60	8.3
CB120410-200	SUA98953	2,000	480	1	60	4.2
CB120810-200	SUA98404	2,000	208	1	60	9.6
CB125210-200	SUA96723	2,500	240	1	60	10.4
CB125410-200	SUA90334	2,500	480	1	60	5.2
CB125810-200	SUA96727	2,500	208	1	60	12
CL130410-200	SUA97791	3,000	480	1	60	6.3
CL140210-200	SUA99109	4,000	240	1	60	16.7
CL140410-200	SUA52741	4,000	480	1	60	8.3
CL140810-200	SUA99110	4,000	208	1	60	19.2
CL150210-200	SUA98913	5,000	240	1	60	20.8
CL150212-200	SUA82416	5000	240	1	60	20.8
CL150412-200	SUA83334	5000	480	1	60	10.4
CL150810-200	SUA96725	5,000	208	1	60	24
WL325410-200	SUA96568	2,500	480	3	60	3
WL325810-200	SUA97254	2,500	208	3	60	6.9
WL340410-200	SUA96787	4,000	480	3	60	4.8
WL340810-200	SUA99286	4,000	208	3	60	11.1
WL350410-200	SUA98951	5,000	480	3	60	6
WL350810-200	SUA92800	5,000	208	3	60	13.9

Subject to change. | WT00043030 | 2021-07

Starting System Data Sheet

Commercial Battery

Extra ruggedness and resistance to vibration, heat, chemicals, and physical abuse are built into every commercial battery provided with an ***mtu*** generator set. The battery design features the latest in power storage technology for lead-acid batteries, as well as incorporates proven designs developed with the most experience in the business.

PRODUCT FEATURES

- **Case Design:** Tough, high-impact reinforced polypropylene case is heat sealed under extreme pressure to withstand heavy commercial service usage. This helps to prevent electrolyte leakage, improves reliability, and reduces breakage.
- **Internal Design:** Full-frame power path grids avoid sharp wires protruding through separators and directs the power straight to the lug for low resistance and higher cranking amps.
- **Terminals:** Standard terminals are solidly built preventing porosity, corrosion, black post, and harmful acid leaks.
- **Power Density:** Extra heavy-duty batteries deliver more cranking amps per pound.
- **Maintenance:** The battery uses pure de-mineralized electrolytes for reduced water loss, reduced gassing, longer battery life, and low maintenance.
- **Reliability:** Narrow ribs reduce separator corrosion to protect against shorts while deep-pocket envelopes dramatically improve reliability and extend service life.
- **Quality:** Over 250 quality control checks, combined with computer-aided design technology, provide a tough, durable battery in each commercial battery provided with an ***mtu*** generator set.

						Overall Dimension			
BCI Group Size	Terminal Type	*mtu* Part Number	Volt	Cranking Performance CCA (Cold Cranking Amps) -18° C / 0° F	Reserve Capacity	Length mm (in)	Width mm (in)	Height mm (in)	Weight (Wet) kg (lbs)
24	Post	SUA102538	12	650	115	273 (10.75)	171 (6.75)	229 (9)	18.1 (40)
31	Post	SUA120299	12	950	175	330 (13)	171 (6.75)	241 (9.5)	25.7 (56.5)
4D	Post	SUA102493	12	1,050	290	527 (20.75)	216 (8.5)	258 (10.125)	45.2 (99.5)
8D	Post	SUA102492	12	1,400	430	527 (20.75)	279 (11)	254 (10)	59.3 (130.5)

Qty:2

Subject to change. | WT00037987 | 2021-09

Battery Charger Data Sheet

MicroGenius Battery Charger

BENEFITS AND FEATURES

Designed for mission-critical applications, the MicroGenius® 2, MicroGenius S2, and MicroGenius S4 battery charger packs advanced technology charging into a small, lightweight, and rainproof package. MicroGenius is the only charger that delivers high-performance charging while prolonging useful life of batteries and significantly reducing risk of sudden battery failure. Rigorous worst-case analysis design processes and extensive abuse testing ensure reliable operation in adverse environments.



- Dynamic Boost™ Charge safely recharges batteries faster than competing products
- HELIX™ technology increases battery life and cuts risk of sudden battery failure
- Field-selectable 12/24 volt output
- Hardened switchmode powertrain delivers first-class abuse resistance and state-of-the-art energy efficiency
- Small, lightweight, water-resistant, and rugged
- Standard J-1939 and Modbus communications

SPECIFICATIONS

AC input

	MicroGenius 2	MicroGenius S2	MicroGenius S4
VAC, Hz	90-265 VAC, 47-63 Hz		
Protection	Supplementary overcurrent protection fuse, transient protected to EN61000-4-5 level 4		
Power factor and efficiency	PF > 0.95 typical; efficiency to 93%; meets CEC Title 20 Efficiency Regulations; standby AC draw < 3W		

A Rolls-Royce solution

SPECIFICATIONS, continued

DC output

	MicroGenius 2	MicroGenius S2	MicroGenius S4
Volts	12V / 24V		
Amps	**MicroGenius 180:** 10A/6A **MicroGenius 300:** 10A **MicroGenius 450:** 15A **MicroGenius 600:** 20A	20A	45A
Charging modes	Multi-stage, including float, boost, and commissioning charge modes		
Current limit	Factory set at 100% of rating. Field adjustable w/optional keypad or from PC[1]		
Charging characteristic	Constant voltage, current limited; patented Dynamic Boost control		
Line and load regulation	± 0.5%		
Output ripple	< 30 mVrms with or without battery. Delivers fast-responding, stable, well-filtered DC without battery.		
Battery temperature compensation	Standard. Optional remote battery temperature probe[2]		
Output protection	Current limit, supplementary overcurrent protection fuse, transient protected		
Dead battery charge	Starts into and recharges zero volt battery without user intervention		
Parallel operation	Two or more chargers operate with all modes sychronized for increased current or fault tolerance[3]		

Adjustment and controls

	MicroGenius 2	MicroGenius S2	MicroGenius S4
Charge mode control	Fully automatic patented Dynamic Boost system. Manual boost and battery commissioning available from keypad.		
Adjustments	12 or 24 volt; battery type program; fine voltage setting, alarm setpoints; alarm relay mapping		
Battery type programs	Flooded lead-acid, Ni-Cd, VRLA, ultracapacitor, lithium[4]		
Field voltage adjustment	Three methods: jumper pins, from front panel keypad (requires that model number digit 12 be F), or from PC[1]	Two methods: from front panel keypad or from PC[1]	

Status display

	MicroGenius 2	MicroGenius S2	MicroGenius S4
LEDs	Two multi-color front panel status LEDs		
Metering and status display	Voltmeter accurate to + 2%; ammeter to + 5%. 20-character display of status and alarm messages		

SPECIFICATIONS, continued

Alarms

	MicroGenius 2	MicroGenius S2	MicroGenius S4
Alarms	Factory set and field reconfigurable. Standard generator set configuration includes summary, AC fail, charger fail, high DC volts, low DC volts, low cranking volts.		
Form C contact alarms	**MicroGenius 180 (X00A42500005):** N/A **MicroGenius 180 (XG3042500013)/ 300/450/600:** Two Form C contacts, each rated 30V, 2A resistive, assignable. Standard configuration includes summary, AC fail, charger fail, high DC volts, low DC volts and discharging battery.	Five Form C contacts, each rated 30V, 2A resistive, assignable. Standard configuration includes summary, AC fail, charger fail, high DC volts, low DC volts and discharging battery.	

Networking

	MicroGenius 2	MicroGenius S2	MicroGenius S4
J-1939 communications	CAN 2.0 extended ID on RJ-45 port		
Modbus communications	Modbus RS-485 on RJ-45 port or Modbus TCP/IP on RJ-45 port.		Uses only Modbus TCP/IP. Do not use Modbus RS-485 for serial port communication.
SENSbus	Proprietary bus for connection of parelleled chargers and SENS accessories		

Environmental

	MicroGenius 2	MicroGenius S2	MicroGenius S4
Operating temp[5] (convection cooled)	**MicroGenius 180:** Meets full specification from -40 °C to +60 °C (-40 °F to +140 °F) **MicroGenius 300/600:** Meets full specification from -40 °C to +50 °C (-40 °F to +122 °F) **MicroGenius 450:** Meets full specification from -40 °C to +40 °C (-40 °F to +104 °F)	Meets full specification from -40 °C to +40 °C (-40 °F to +104 °F)	
Humidity	5% to 95%, non-condensing		
Ingress protection	IP 22; NEMA 3R; UL Listed "Rainproof"	IP 20; NEMA 1. Optional drip shield for IP 22/NEMA 3R rating.	
Vibration	Swept Sine (EN60068-2-6); 4G, 18-500 Hz, 3 axes. Random: 20-500 Hz, 0.01G2/Hz		
Shock	EN 60068-2-27 (15G)		
Electrical transient	ANSI/IEEE C62.41 and EN 61000-4-12 on power terminals		

SPECIFICATIONS, continued

Abuse protection

	MicroGenius 2	MicroGenius S2	MicroGenius S4
Reverse polarity	Charger self-protects without fuse clearing. Indication via LED and optional LCD.	Charger self-protects without fuse clearing. Indication via LED and LCD.	Charger self-protects without output protective device clearing. Indication via LED and LCD.
Wrong voltage battery	Charger-battery voltage mismatch shuts down charger. Indication via LED and LCD		
Overvoltage shutdown	Selective: Shutdown only operates if charger causes the overvoltage condition		
Overtemp protection	Gradual output power reduction if heatsink temperature becomes excessive		

Regulatory compliance

	MicroGenius 2	MicroGenius S2	MicroGenius S4
North America	C-UL Listed for US and Canada: UL 1236 categories BBGQ, BBHH, BBJY and QWIR[6], CSA 22.2, No. 107.2. Certified to UL 1236 supplements SB (marine), SC (fire pump) and SE (emergency generator)		
	NFPA-70, NFPA-1107 **Note:** MicroGenius 2 180 (X00A42500005) meets NFPA-70 only.		
	FCC Part 15, Class B	FCC Part 15, Class A	
	Seismic: Rigid and non-structure wall mount; max SDS of 2.5G. IBC 2000-2015, Calif. BC 2007-2016		
	American Bureau of Shipping, type approved		
European Union (CE)	EMC: 2014/30/EU (EN 61000-6-2 and EN 61000-6-4)		
	LVD: 2014/35/EU (EN 60335-1 and EN 60335-2-29)		
	RoHS 2: 2011/65/EU (EN 50581)		

Construction

	MicroGenius 2	MicroGenius S2	MicroGenius S4
Housing/Configuration	Die-cast aluminum heatsink base with stainless steel covers and fasteners	Aluminum with powder coated finish	
Connections	AC and DC terminal blocks: 20 to 10 AWG J-1939 and Modbus-485: RJ-45. Form C alarms: 28 to 16 AWG	AC and DC terminal blocks: 20 to 2 AWG J-1939 and Modbus: RJ-45. Form C alarms: 28 to 16 AWG	AC and DC terminal blocks: 14 AWG to 2/0 AC and DC breakers < 50A (optional): 14 to 2 AWG AC to DC breakers, ≥ 50 A (optional): 12 AWG to 2/0 J-1939 and Modbus: RJ-45 Form C alarms: 28 to 16 AWG

1 Requires optional computer-to-charger adapter. To order, contact ***mtu*** Parts Department.
2 Remote battery temp sensor is optional. To order, contact ***mtu*** Parts Department.
3 Requires standard RJ-45 network cable to connect paralleling bus. To order, contact ***mtu*** Parts Department.
4 Contact factory to determine compatibility with the battery management system (BMS) of your lithium battery.
5 At 65 °C (149 °F) and above, the LCD display may be unreadable and display life will be reduced.
6 Except 180 W unit in 24-V configuration, which is not listed to QWIR
7 All chargers equipped with an alarm/display board meet NFPA-110 requirements. For chargers without an alarm/display board to meet NFPA-110, charger performance and alarm data available on the J-1939 port must be annunciated by the generator set control panel.

MICROGENIUS ORDERING INFORMATION

Battery charger	*mtu* part #	Output volts	Output amps
MicroGenius 2 180*	X00A42500005	12/24 Volts	10/6 Amps
MicroGenius 2 180**	XG3042500013	12 Volts	10 Amps
MicroGenius 2 300**	X54942500005	24 Volts	10 Amps
MicroGenius 2 450**	XG3042500014	24 Volts	15 Amps
MicroGenius 2 600**	XG4842500003	24 Volts	20 Amps
MicroGenius S2	X54942500003	12/24 Volts	20 Amps
MicroGenius S4	X54942500002	12/24 Volts	45 Amps

*Meets NFPA-70 only.
Includes ***mtu*-specific programming

DIAGRAMS AND DIMENSIONS

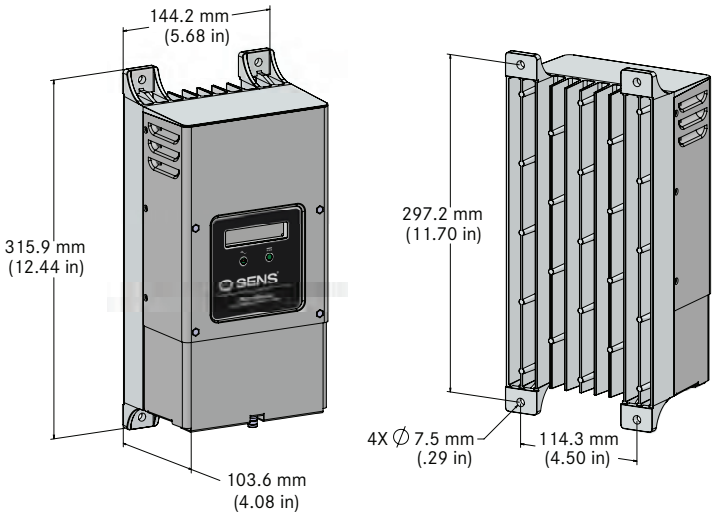

MicroGenius 2 Dimensions

Air Filter Data Sheet

DESCRIPTION

Air filters offer engine protection and minimal downtime during normal maintenance. The air filters on ***mtu*** generator sets are easy to install, durable, and reliable.



FEATURES

- Designed to withstand severe intake pulsation and high humidity
- Sturdy, self-supporting, one-piece construction
- Lightweight and compact

SPECIFICATIONS

mtu Part #	Airflow @ Inches of Water Restriction (refer to *Airflow Diagrams* below)			Weight	Maximum Temp	
	m^3/min (SCFM) @ 4 in. H_2O	m^3/min (SCFM) @ 6 in. H_2O	m^3/min (SCFM) @ 8 in. H_2O	kg (lb)	Continuous °C (°F)	Intermittent °C (°F)
SUA106417	4.3 (150)	5.1 (180)	6.1 (215)	1 (2.2)	83 (180)	105 (220)
SUA90069	43.9 (1,550)	52 (1,836)	60 (2,118)	3.6 (8)	83 (180)	105 (220)
SUA86885 XG4812300007	13.7 (485)	17.6 (620)	21.5 (760)	2.6 (5.8)	83 (180)	105 (220)
SUA77166	3.8 (135)	4.6 (163)	5.3 (190)	1.3 (2.9)	N/A	N/A
SUA77167	9.7 (343)	12.2 (432)	14.9 (525)	2.7 (6)	N/A	N/A
SUA40198	3.1 (112)	4.1 (145)	4.8 (170)	0.64 (1.4)	83 (180)	105 (220)
XG3012100019	23.5 (830)	31.43 (1,110)	36.67 (1,295)	1.45 (3.2)	83 (180)	105 (220)
XG2112100001 XG2512100002	9.63 (340)	13.03 (460)	15.85 (560)	1.59 (3.5)	N/A	N/A

mtu Part #	Dimensions (refer to *Dimension Diagrams* on next page)				Minimum Removal Clearance
	Body Length (D) mm (in)	Body Diameter (A) mm (in)	Outlet Length (F) mm (in)	Outlet Diameter (C) mm (in)	mm (in)
SUA106417	127 (5)	216 (8.5)	35 (1.38)	76 (3)	38.1 (1.5)
SUA90069	400 (15.75)	318 (12.5)	48 (1.89)	198 (7.8)	38.1 (1.5)
SUA86885 XG4812300007	279 (11)	318 (12.5)	35 (1.38)	127 (5)	38.1 (1.5)
SUA77166	172 (6.75)	216 (8.5)	27 (1.08)	75 (2.96)	38.1 (1.5)
SUA77167	152 (6)	267 (10.5)	35 (1.37)	102 (4)	38.1 (1.5)
SUA40198	102 (4)	216 (8.5)	35 (1.38)	64 (2.5)	38.1 (1.5)
XG3012100019	381 (15)	318 (12.5)	35 (1.38)	152 (6)	38.1 (1.5)
XG2112100001 XG2512100002	267 (10.5)	267 (10.5)	35 (1.38)	102 (4)	38.1 (1.5)

N/A = Not Available

A Rolls-Royce solution

AIRFLOW DIAGRAMS

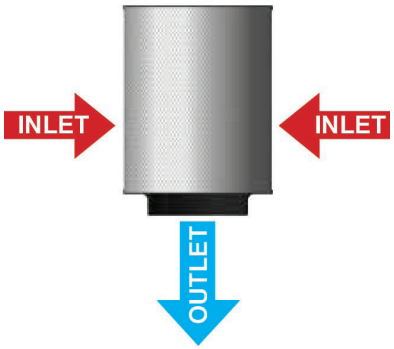

Airflow Diagram: SUA90069, XG3012100019

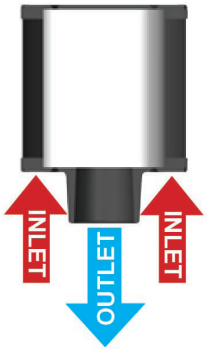

Airflow Diagram: SUA106417, SUA86885, SUA77166, SUA77167, SUA40198, XG4812300007



Airflow Diagram: XG2112100001, XG2512100002

DIMENSION DIAGRAMS

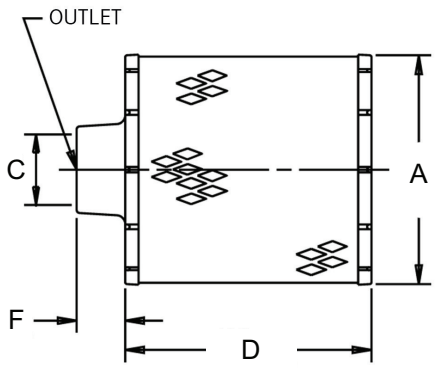

Dimension Diagram: SUA90069, XG3012100019

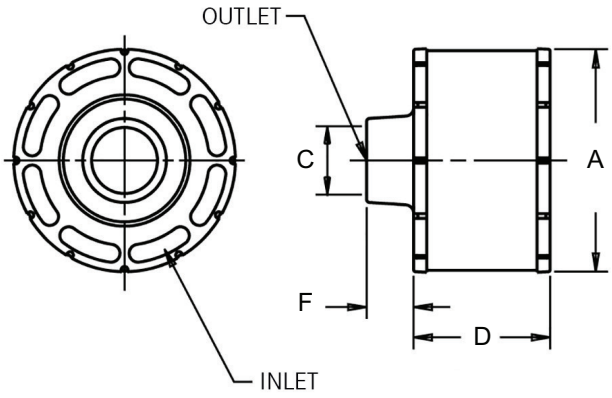

Dimension Diagram: SUA106417, SUA86885, SUA40198, XG4812300007

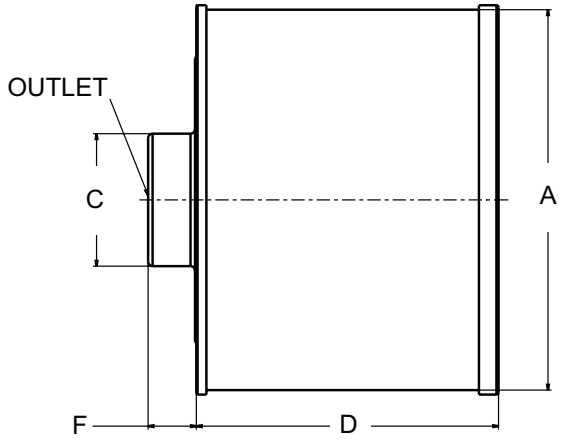

Dimension Diagram: SUA77166, SUA77167, XG2112100001, XG2512100002

Subject to change | WT00037879 | 2026-03

Diesel Fuel Water Separator Data Sheet

HDP 600 (Non-Switchable)

Filter assemblies are designed of heavy duty construction and use 10 Micron filter element(s). High capacity water separation (95% water removal efficiency in accordance with ISO CD 16332) and fuel filtration processes protect engine components from dirt, rust, algae, asphaltines, varnishes, and especially water, which is prevalent in engine fuels. These filters are easy to service with clear collection bowl(s) and manual water drain(s).

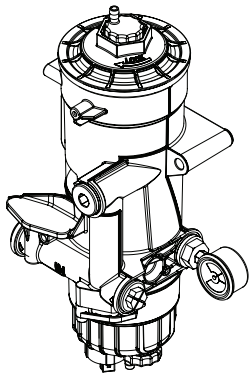

SPECIFICATIONS

Hydac Model Number:	HDP 600
mtu Part Number (10 Micron filter element):	X57508300136
Generator Set Model Power Range (Standby):	750-900 kWe
Generator Set Model Power Range (DCCP/PPSE):	690-820 kWe
Height:	415 mm (16.3 in)
Depth:	155 mm (6.1 in)
Width:	210 mm (8.3 in)
Weight (dry):	9.5 kg (20.1 lb)
Maximum Flow Rate:	600 lph (158.5 gph)
Port Size:	M27x2 DIN 6149-1
Minimum Service Clearance:	
(above assembly)	174 mm (6.85 in)
(below assembly)	84 mm (3.3 in)
Working Pressure:	0 to 1 bar abs (0 to 14.5 psi abs)
Burst Pressure:	3 bar rel (45.5 psi rel)
Collapse Pressure:	7 bar rel (101.5 psi rel)
Fuel Temperature:	-40 °C to 100 °C / -40 °F to 212 °F
Environmental Temperature:	-40 °C to 80 °C / -40 °F to 176 °F

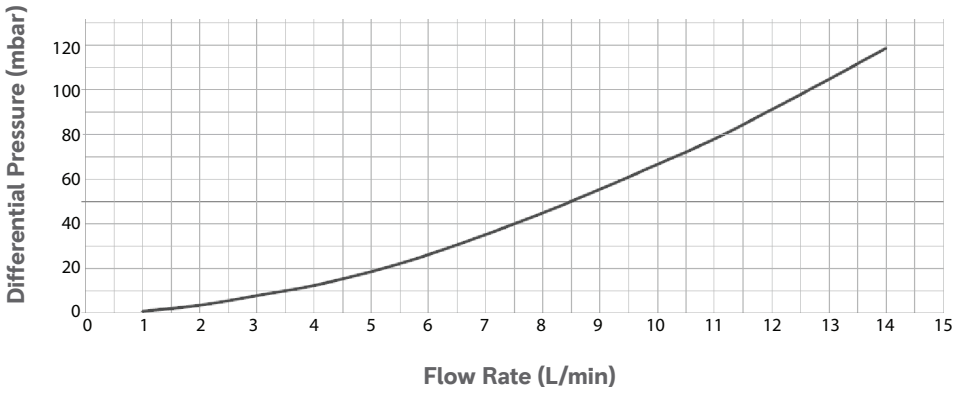

Subject to change. | WT00058904 | 2021-10

A Rolls-Royce solution

48 Hour/3030 Gallon

Diesel Fuel System Data Sheet

Sub-Base Tank



DESCRIPTION

The sub-base fuel tanks used with ***mtu*** generator sets are manufactured and listed per UL142 and ULC-S601 standards for steel above-ground tanks. These certifications ensure that our tanks meet the structural and mechanical integrity requirements for mounting generator sets directly on top, providing our customers with a safe and efficient fuel storage system. These tanks are suitable for above-ground storage of non-corrosive, stable, flammable, or combustible liquids that have a specific gravity not exceeding that of water. They are intended for installation and use in accordance with the codes referenced in the *Certifications and Standards* section. The secondary containment construction consists of a steel tank within a closed steel containment dike that is capable of being monitored for leakage.

STANDARD FEATURES

- Normal vent
- Emergency vent
- Manual fill
- Cam lockable fill cap
- Basin drain (plugged)
- Removable supply and return dip tubes
- Leak detection
- Black paint finish
- Secondary containment
- Electrical stub-up area: Provides space for generator set electrical connections and internal wiring capabilities
- Baffles: Separate cold engine supply fuel from hot returning fuel (additional baffling as required for structural integrity)
- Fuel level gauge: A direct-reading fuel level gauge with electric sender

OPTIONAL FEATURES

- Fuel fill drop tube
- Level alarm
- High fuel pre-alarm and low fuel level shutdown
- ~~Five-gallon spill/fill containment box with lockable hatch~~
- ~~Optional selectable accessories to meet regional codes/ jurisdictions~~
- ~~IBC certification 2015, 2018, and 2021~~

A Rolls-Royce solution

CERTIFICATIONS AND STANDARDS

United States	Canada
UL 142	ULC-S601

In addition, this equipment is compatible with the following certifications when properly installed in accordance with all applicable codes, standards, regulations, and laws pertaining to the installation and application of the product. Reference the prevailing codes for installation requirements.

United States	Canada
NFPA 30	Part 4: National Fire Code of Canada
NFPA 37	CSA B139
NFPA 110	CSA C282
International Fire Code	CCME PN 1326

SUGGESTED REGIONAL CODE REQUIREMENTS

Pre-engineered accessories can be added to sub-base fuel tanks on 30-1,250 kW generator sets to meet regional codes/ jurisdictions. Reference the table on page 3 for available options.

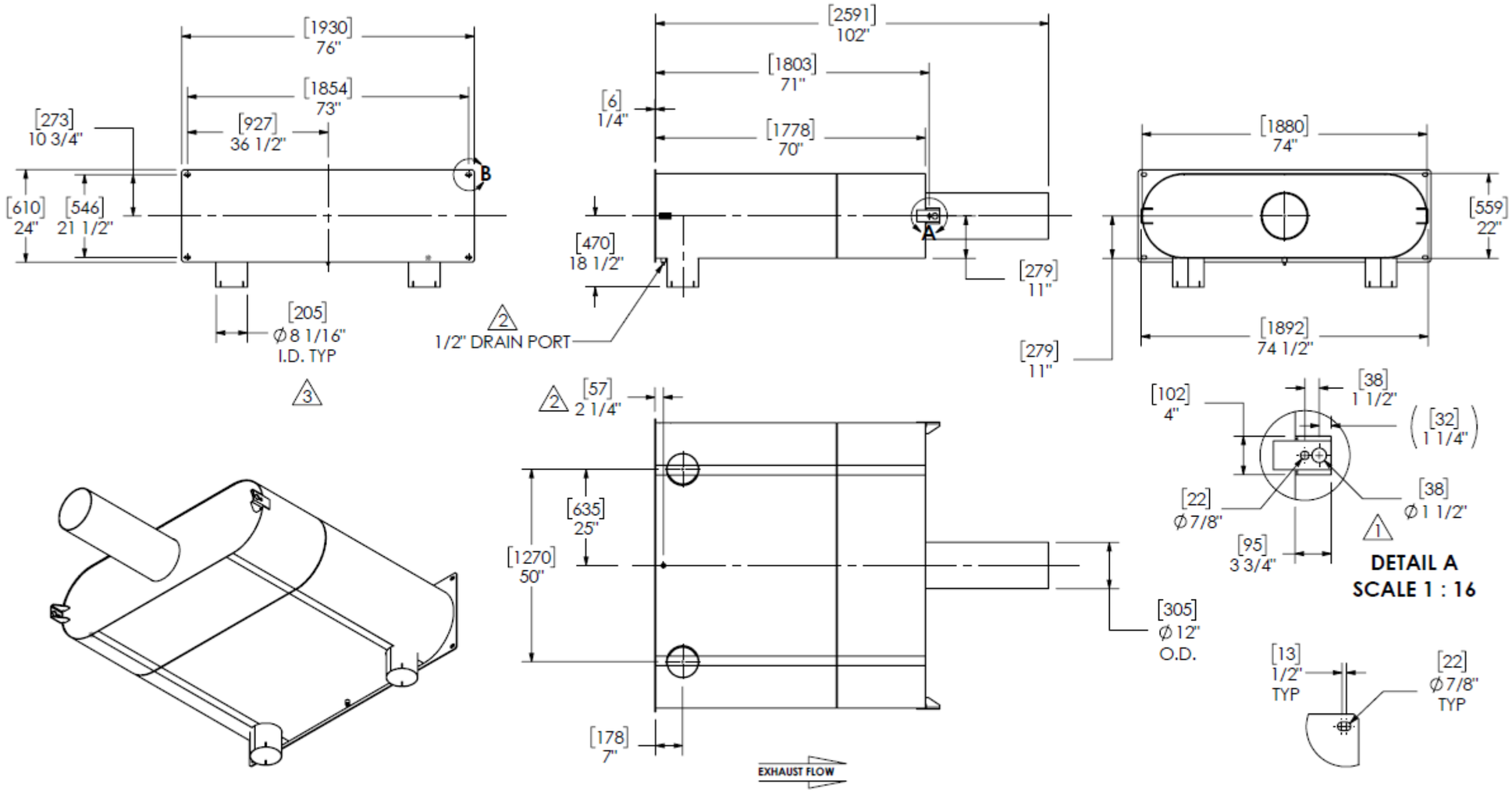

NOTES:

- DO NOT USE EQUIPMENT TO SUPPORT OTHER PARTS OF THE EXHAUST SYSTEM WITHOUT PROPER REINFORCEMENT

MATERIAL CONSTRUCTION:

- CARBON STEEL

PAINT:

- HIGH TEMPERATURE BLACK (MIRATECH COATING SYSTEM 5)

REV	DATE	BY	COMMENTS	SHEET NO.
1	6/3/2020	SAC	REVISED MOUNTING BRACKET DESIGN AND LOCATIONS PER CUSTOMER REQUEST	-
2	9/23/2020	SAC	RELOCATED DRAIN PORT	-
3	6/17/2021	TES	CHANGED Ø8" I.D. TO Ø8 1/16" I.D.	-

PROJECT NAME

PROPOSAL NUMBER

SALES ORDER NO.

CUSTOMER P.O.

PROPRIETARY AND CONFIDENTIAL

THE INFORMATION CONTAINED IN THIS DRAWING IS THE SOLE PROPERTY OF MIRATECH GROUP, LLC. ANY REPRODUCTION IN PART OR AS A WHOLE WITHOUT THE WRITTEN **PERMISSION OF MIRATECH** GROUP, LLC IS PROHIBITED.

DIMENSIONS ARE IN INCHES UNLESS OTHERWISE SPECIFIED

DIMENSIONAL TOLERANCES UNLESS OTHERWISE SPECIFIED
ANGLES MACH: ±1° BEND: ±3°
INCHES: ±0.125 MILLIMETERS: ±2

DO NOT SCALE DRAWING

MIRATECH

em PRODUCTS

OHBE2Z-D08CF12TS-2-20040079
Sales Drawing

DRAWN	DATE	DRAWING	REV
TES	05/01/2020	OHBE2Z-D08CF12TS-2-20040079 SD	3
REVIEWED BY: MLC	DATE: 05/01/2020	SIZE: A · SCALE 1:40 · WEIGHT: 1311 lb	SHEET 1 OF 1

Aenderungsbeschreibung/Description of Revision	Kommt vor/Frequency

Buchst./Rev.Ltr.	Erh-Antrags-Nr. / Promotion request No.	Aenderungs-Nr./Revision Notice No.	Bearbeitungsstatus/Lifecycle
-.2			Released

mtu A Rolls-Royce solution
Rolls-Royce Solutions GmbH

		Blatt/ Sheet
Zeichnungs-Nr./Drawing No.	ZNG00041261	2
Material-Nr./Material No.	X57541700183	von/of 2

Alle Rechte aus Schutzrechtsanmeldungen vorbehalten. Weitergabe, Vervielfaeltigung oder sonstige Verwertung ohne Zustimmung nicht gestattet. Zuwiderhandlungen verpflichten zum Schadensersatz.
All industrial property rights reserved. Disclosure, reproduction or use for any other purpose is prohibited unless our express permission has been given. Any infringement results in liability to pay damages.

Nidec
All for dreams

KATO ENGINEERING™
LEROY-SOMER™

Kato Engineering-Leroy Somer, 2075 Howard Dr. W., N. Mankato, MN 56003
507-345-4011
41139201

Model: **LSA 49.3 M8**

Data Sheet Base Rating	**KW**	**750**	**kVA**	**937.5**	**Temperature Rise**	**130**
	Voltage	**480**	**Frequency**	**60**	**Excitation**	**PMG**
	FLA	**1128**	**RPM**	**1800**	**Enclosure**	**IP-23**
	Connection	**WYE**	**Connection Type**	**4 Bus Bar**	**Base Z**	**0.246**
	Lead	**12**	**Altitude**	**1000m**	**Pitch**	**0.67**

Ratings	**Voltage**	**240 / 480**
Application	**Rise/ by Resistance @ Ambient**	**kW**
Prime Power-Class B Rise	80°C / 40°C	656
Prime Power-Class F Rise	105°C / 40°C	740
Prime Power-Class H Rise	125°C / 40°C	820
Standby-Class F Rise	130°C / 40°C	820
Standby-Class H Rise	150°C / 40°C	869

Efficiency - %	**kW Load**	**0.8 PF**	1.0 PF	Heat Rejection (BTU/HR)
125	938	94.3%	96.0%	192859
100	**750**	**94.8%**	**96.3%**	**141052**
75	563	95.2%	96.3%	97199
50	375	95.0%	95.8%	67779
25	188	93.1%	93.7%	47303

			Saturated	Unsaturated
Reactances - PU on Gen	Direct Axis	X_d	2.829	3.319
Base KW = 750kW	Transient Direct Axis	X'_d	0.158	0.198
	Subtransient Direct Axis	X''_d	0.127	0.158
	Quadrature Axis	X_q	1.443	1.693
	Subtransient Quadrature Axis	X''_q	0.142	0.167
	Negative Sequence Reactance	X_2	0.134	0.158
	Zero Sequence Reactance	X_0	0.006	0.007
	Leakage Reactance	Xl	0.079	0.090
Time Constants-seconds	D-Axis, 3PH, SC Transient	T'_d	0.100	
	D-Axis, 3PH, SC Sub-Transient	T''_d	0.010	
	Arm Ckt	T_a	0.015	
	D-Axis, OC Transient	T'_{do}	2.094	
Short Circuit Ratio			0.353	
BIL			3465	
X/R Ratio			5.5	

Sequence Resistance		**Actual**	**Percent**
	Zero Sequence R0	0.0005	0.19
	Negative Sequence R2	0.0143	5.80

Short Circuit Current	**Type**	**Instantaneous/Symmetrical**		**Instantaneous/Asymmetrical**	
		P.U.	Amps	P.U.	Amps
	3 Phase	7.9	8897	13.7	15409
	Line to Line	6.6	7481	11.5	12958
	Line to Neutral	11.2	12681	19.5	21964

Cooling Air Required	m3/sec (cfm)	—
Resistance-ohms 25°C	Main Stator/Phase	0.002920
	Main Rotor	0.436
	Exciter Stator	12.43
	Exciter Rotor	0.083
Bearing Size	DE	N/A
Bearing Size	NDE	6318 ZZ C3
Weight	Kg/(Lbs.)	1641 (3618)
Voltage Regulation	Standard Voltage Regulator	D550
Overload	%	10% Per NEMA MG-1 Guidelines
Insulation System	Class	H
Power Quality	THD - %	≤ 5%
All Values @ L - L, N.L	SHD - %	≤ 3%
	THF - %	≤ 2.5%
	TIF	≤ 50
	Deviation Factor	≤ 10%
Insulation Resistance		
Hi Potential Test Volt A.C.	Main Stator	1960
	Main Rotor	1500
	Exciter Stator	1500
	Exciter Rotor	1500
Overspeed		Rated RPM + 25%
Phase Sequence		CCWFDE, A-B-C

Nidec All for dreams

KATO ENGINEERING LEROY-SOMER

Kato Engineering-Leroy Somer, 2075 Howard Dr. W., N. Mankato, MN 56003
507-345-4011

Model:		LSA 49.3 M8				
Data Sheet Base Rating	KW	750	kVA	937.5	Temperature Rise	130
	Voltage	480	Frequency	60	Excitation	PMG
	FLA	1128	RPM	1800	Enclosure	IP-23
	Connection	WYE	Connection Type	4 Bus Bar	Base Z	0.246
	Lead	12	Altitude	1000m	Pitch	0.67

Motor Starting; Load Application and Rejection at Rated PF

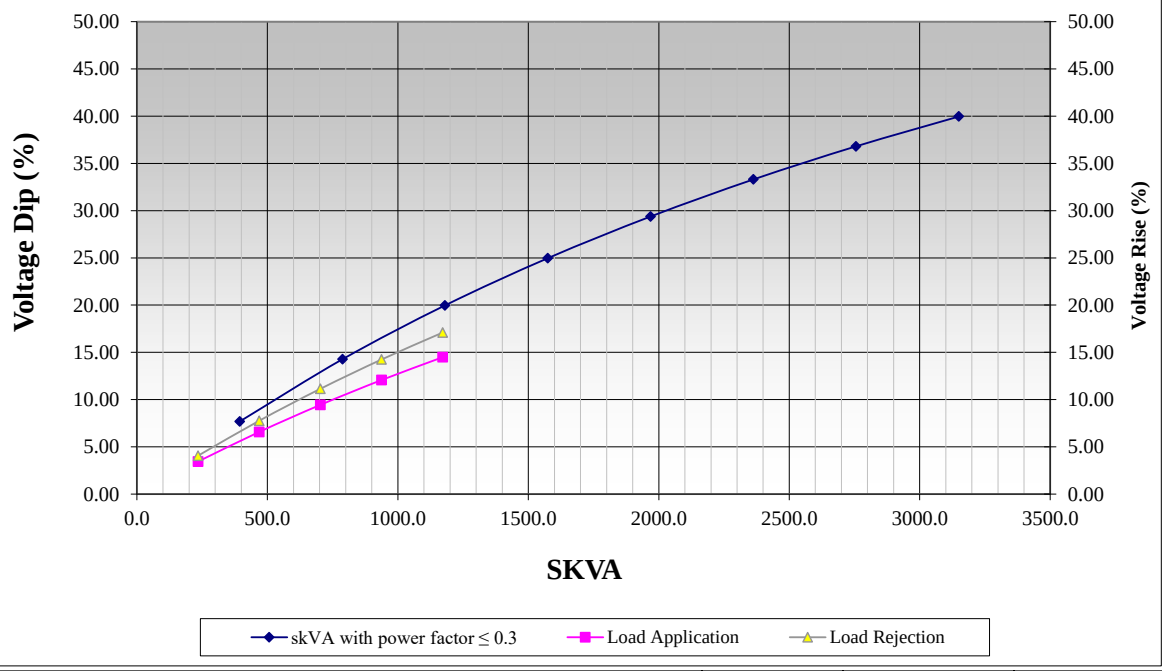

Generator Efficiency, 0.8PF and 1.0PF

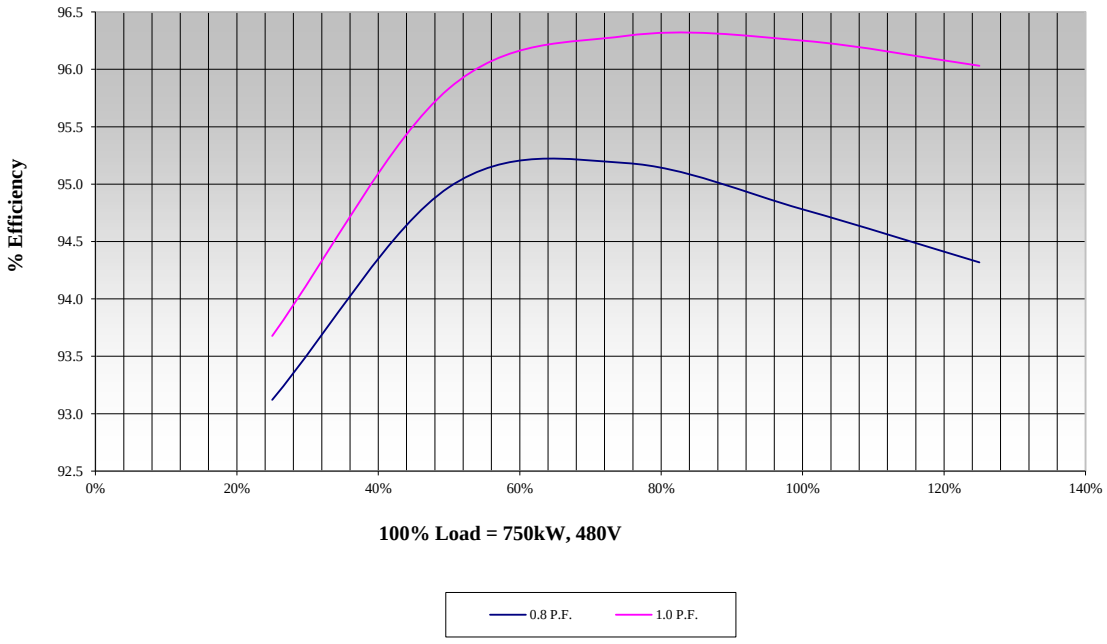

STATOR DAMAGE CURVE

CLASS H RISE, CLASS H INSULATION

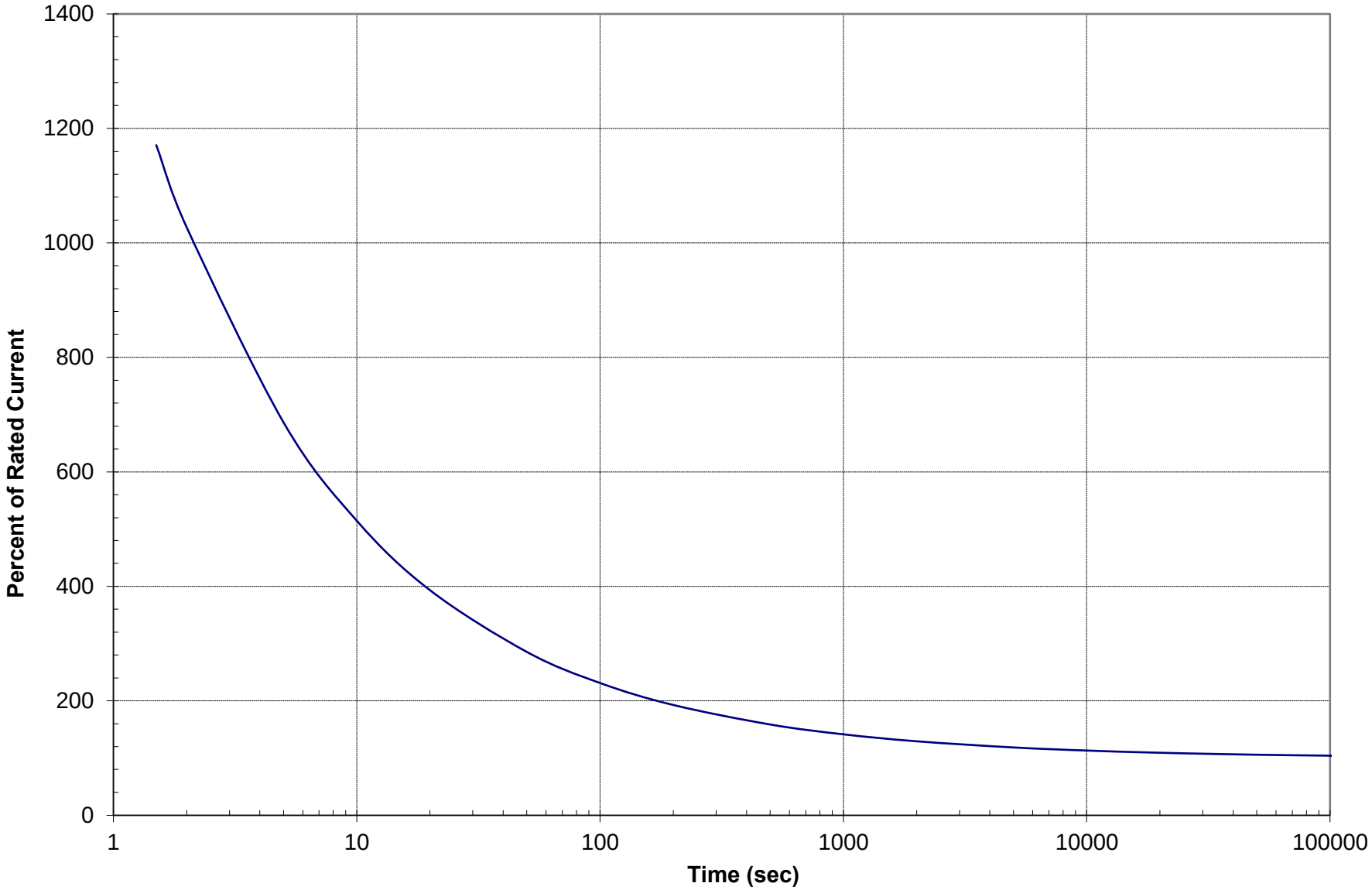

© Kato Engineering, USA 2024

REACTIVE CAPABILITY CURVE

LSA 49.3 M8 750KW 937.5KVA 480V 60HZ 130°C Rise

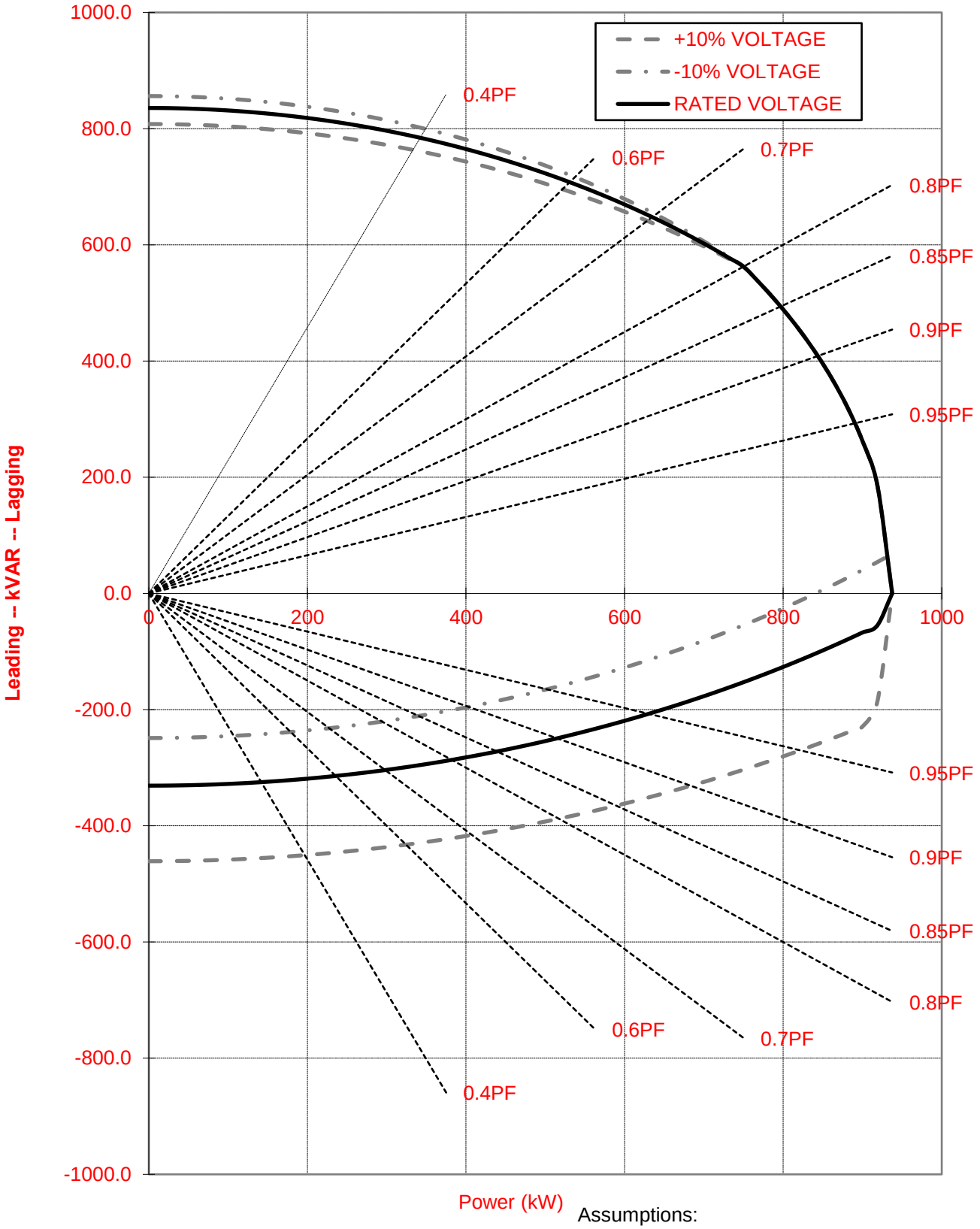

Assumptions:

1. System reactance is 0.4 P.U.
2. Regulator stability limit is not included
3. Curve is based on linear reactive loading

© Kato Engineering, USA 2024

SHORT CIRCUIT DECREMENT CURVES

LSA 49.3 M8 750KW 937.5KVA 480V 60HZ 130°C Rise

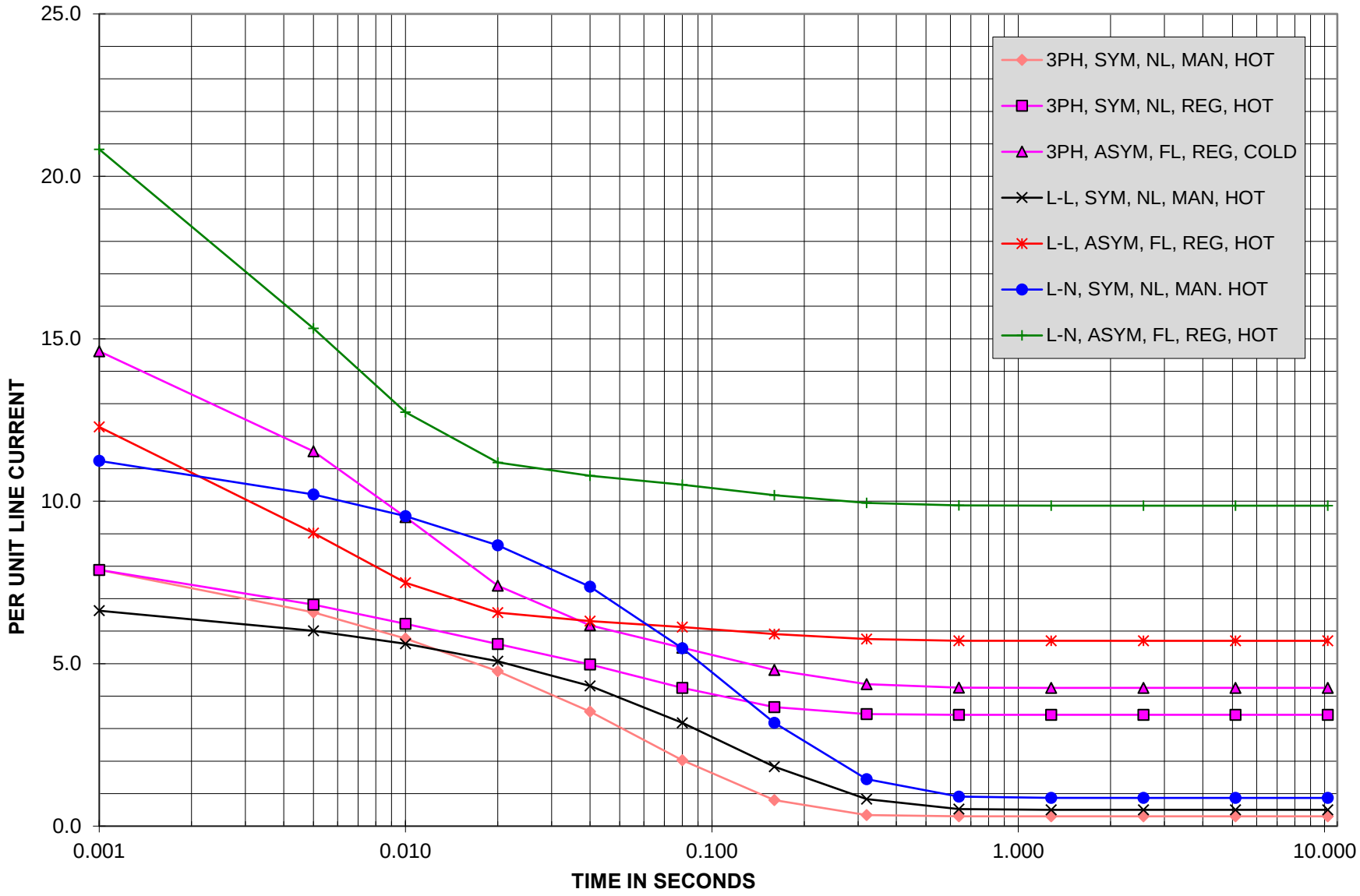

SYM = Symmetrical NL = No Load FL = Full Load REG = Regulated

© Kato Engineering, USA 2024

Nidec
All for dreams

LEROY-SOMER™
KATO ENGINEERING™

DATASHEET

D550 DIGITAL AVR
FOR ALTERNATORS WITH SHUNT, AREP OR PMG EXCITATION

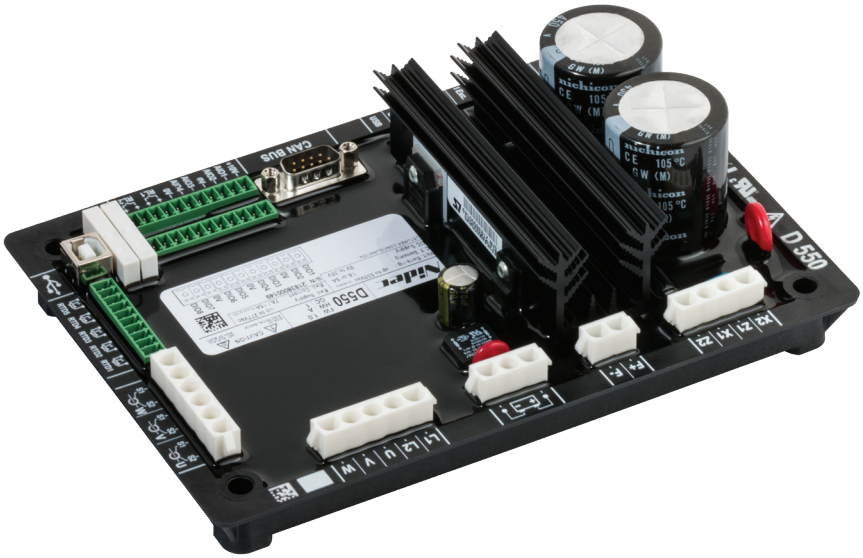

The D550 is a digital automatic voltage regulator (AVR) for alternators with rated field current up to 8 A at 55°C.

It offers a vast array of regulation modes suitable for all power generation applications, including grid-connected configurations.

The D550 also integrates a visual interface through the EasyReg Advanced software, which allows the user to read the configuration values and parameters. It can also be configured directly via USB without external power supply.

The D550 also includes several protections and functions to keep the alternator running in full safe operation, in particular settings to comply with public network connection instructions (grid code).

The communication port is CANJ1939 compatible.

KEY FEATURES

- **Regulation modes**
  - Voltage regulation accuracy: -/+ 0.25%
  - Field current (manual mode)
  - Generator power factor
  - Grid power factor
  - Generator kVAr
- **Regulation features**
  - Voltage equalization
  - Droop management
  - Cross current compensation
  - Soft start
  - Load Acceptance Module (L.A.M.) function to assist during heavy load application events
  - Negative field forcing
- **kW, kVAr, kVA & PF calculation**
- **Protections & Limitations**
  - Under and over field current limitation
  - Loss of field sensing
  - Generator under/over voltage
  - Loss of sensing
  - V/Hz regulation mode
  - Diode fault monitor
- **Data logger** (option)
- **Synchronization monitoring**
- **Events log**

ELECTRIC FEATURES

- **Generator voltage measurement**
  - 3-phase, 2-phase
  - Range: 0-230-530 VAC
  - Consumption: < 2 VA
- **Grid voltage measurement**
  - 2-phase
  - Range: 0-230-530 VAC
  - Consumption: < 2 VA
- **Generator current measurement**
  - 1 or 3-phase
  - Secondary range: 1 or 5 A
  - Consumption: < 2 VA
- **AC supply input**
  - PMG, AREP, SHUNT
  - Range: 50-277 VAC
- **Excitation**
  - Rated field current (continuous):
    7 A at 70°C
    8 A at 55°C
  - Field forcing current (10s max):
    15 A at 70°C
  - Recommended field resistance:
    > 4 ohms
- **Auxiliary supply:** 8-35 VDC
  - Consumption: < 1 A
- **Frequency range:** 30-400 Hz
- **Storage temperature:** -55°C +85°C
- **Operating temperature:** -40°C +70°C

INPUTS / OUPUTS

- **8 programmable digital inputs & outputs**
  - Output specification: 150 mA - 30 VDC
- **4 programmable analog inputs & outputs**
  - 4-20 mA / ±10 V / 0-10 V / potentiometer (1 kΩ)
- **2 relay outputs**
  - Specifications: 125 VAC - 5 A
- **5 temperature sensings**
  - Type: Pt100/CTP
  - Programmable threshold

COMMUNICATION & SETTINGS

- Software configuration (PC tool)
- USB port (self powered)
- CAN J1939 and Proprietary (Leroy-Somer protocol)

DIMENSIONS

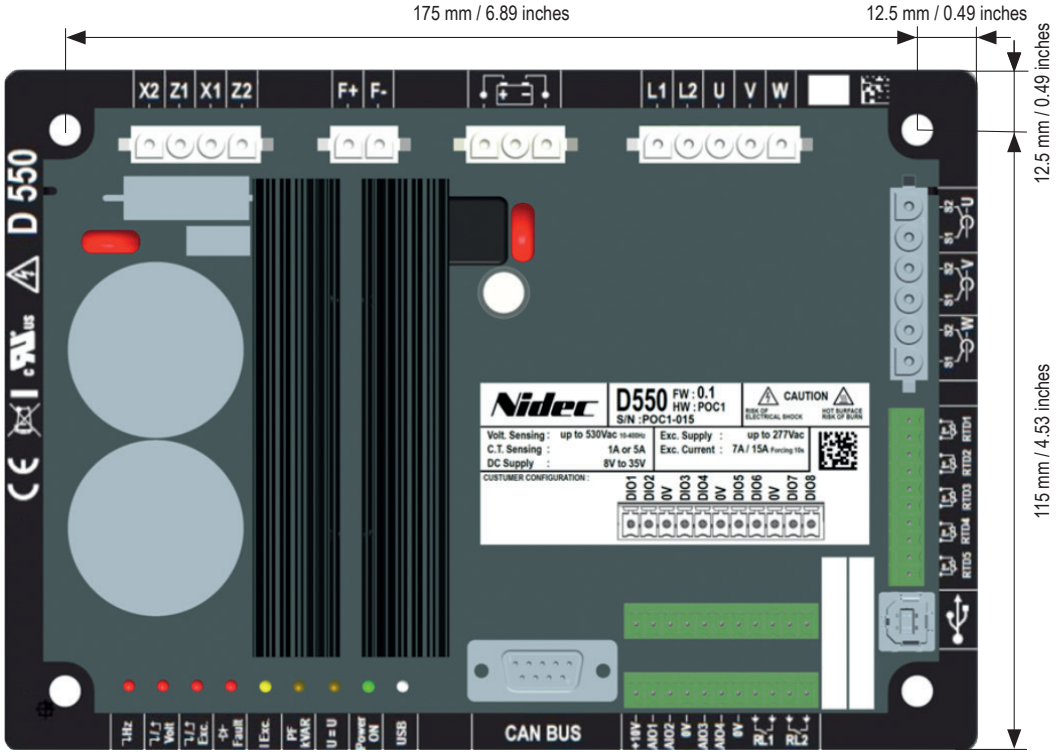

Same footprint as Leroy-Somer D510C

© Nidec 2019. The information contained in this brochure is for guidance only and does not form part of any contract. The accuracy cannot be guaranteed as Nidec have an ongoing process of development and reserve the right to change the specification of their products without notice.

Digital Generator Set Controller Data Sheet

MGC-3000 Series

The MGC-3000 Series controllers include the following models which are described throughout this document.*

— MGC-3010
— MGC-3050

mtu Generator Set Controllers (MGC Series) are rugged, reliable, all-in-one digital generator set control and load share systems. The MGC-3000 Series is designed to be a high end controller that is well suited for mains fail, paralleled units, and systems with multiple buses. The MGC-3000 Series has all of the necessary items for complete generator set control, protection, and metering with a massive, but easy-to-use, programmable logic system.



PRODUCT HIGHLIGHTS

— Three-phase generator metering
— Up to two buses with three-phase voltage metering
— Three dedicated generator CTs with up to four auxiliary CTs
— Engine metering
— Generator set control
— Generator protection
— Residual current - Equipment Ground Fault Protection (EGFP) certified to UL 1053
— BESTCOMS*Plus*®
  - Windows®-based software for optional remote operation (Software can be downloaded at www.mtu-solutions.com)
  - Programming and setup software
  - Intuitive and powerful
  - Remote control and monitoring
  - Programmable logic
  - USB communications
— Automatic transfer switch compatible
— Resistor sender inputs for oil pressure and coolant pressure (option for analog senders available)
— Dual CAN bus ports [one for each SAE J1939 Engine Control Unit (ECU) and expansion modules]
— Dual Ethernet ports
— Load sharing capabilities of kW and kVARs over Ethernet
— Load share line compatibility (0-10 VDC)
— Zero power transfer capabilities
— Two analog inputs
— Governor and AVR bias outputs (reprogrammable to general analog outputs)
— 16 programmable contact inputs, 12 programmable contact outputs
— Three programmable LEDs for customized annunciation
— Connects to up to four AEM-2020s and four CEM-2020s
— Configurable protection with up to 371 different parameters
— Configurable elements for customizable alarms
— Real time analysis feature
— UL recognized, CSA certified, CE approved
— Multilingual capability
— Remote annunciation with RDP-110
— NFPA-110 compatible
— Microprocessor based
— Expandable to meet customer needs
— Optional accessories for Ethernet communication

*Please refer to the last page of this data sheet for available MGC-3000 Series configuration options. The MGC Series Controller Comparison Data Sheet is available as a reference for all MGC Series configuration options.

DIAGRAM

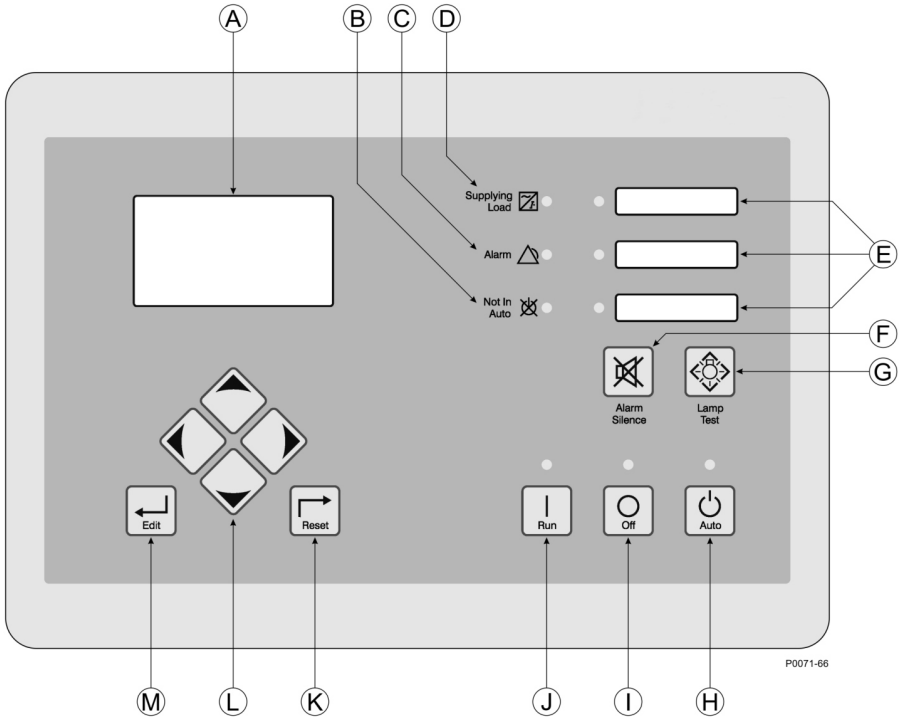

Figure 1: MGC-3000 Front Panel

A. Liquid crystal display
B. Not in Auto indicator
C. Alarm indicator
D. Supplying load indicator
E. Programmable indicators
F. Alarm Silence pushbutton
G. Lamp Test pushbutton
H. Auto pushbutton and mode indicator
I. Off pushbutton and mode indicator
J. Run pushbutton and mode indicator
K. Reset pushbutton
L. Arrow pushbuttons
M. Edit pushbutton

FUNCTIONS

Generator set protection

Generator ANSI codes

- Overvoltage (59)
- Overfrequency (81O)
- Reverse and forward power (32)
- Phase voltage imbalance (47)
- Vector shift (78)
- Undervoltage (27)
- Underfrequency (81U)
- Loss of excitation (40Q)
- Overcurrent (51)
- Rate of change of frequency (81R)

Note: All generator set protection features are programmable as alarms, pre-alarms, status, or not used.

FUNCTIONS, continued:

Generator set protection, continued:

Alarms (Shutdowns)
- Low oil pressure
- High coolant temperature
- Low coolant level
- Overspeed
- Overcrank
- Coolant temp sender fail (non-ECU engines)
- Oil pressure sender fail (non-ECU engines)
- Emergency stop
- Critical low fuel level (Refer to *Configuration Options*.)

Pre-alarms (Warnings)
- Low oil pressure
- High coolant temperature
- Low coolant temperature
- Battery overvoltage
- Weak battery voltage
- AEM1 through AEM4 comms failure
- Breaker open failure
- CEM1 through CEM4 comms failure
- Generator reverse rotation
- ID missing
- Intergenset communication failure
- Loss of voltage sensing
- Checksum failure
- ECU comms fail
- Low fuel level
- High fuel level
- Active Diagnostic Trouble Codes (DTC)
- Breaker close failure
- Bus 1 and bus 2 reverse rotation
- Ethernet 1 and Ethernet 2 link lost
- High battery voltage
- ID repeat
- Low battery voltage
- Synchronizer failure

All alarms and pre-alarms can be enabled or disabled via the BESTCOMS*Plus*® PC software or the front panel. Additional custom alarms and pre-alarms are available upon request.

Generator and bus protection and metering
- Multifunction protection guards against overvoltage, undervoltage, excessive forward and reverse power, underfrequency, and overfrequency. Overcurrent, phase imbalance, and loss of mains are available as options. Each protection function has an adjustable pickup and time delay setting. 16 inverse time curves, in addition to user-programmable curves, enable the MGC-3000 Series to offer overcurrent protection in a variety of applications. Each protective element can be assigned to the generator, bus 1, or bus 2.
- Metered generator and bus parameters include voltage, current, real power (watts), apparent power (VA), and power factor (PF).

Engine protection and metering
- Engine protection features include oil pressure and coolant temperature monitoring, overcrank protection, ECU-specific protection elements, and diagnostic reporting.
- Metered engine parameters include oil pressure, coolant pressure, battery voltage, speed, fuel level, engine load, coolant level (from ECU), ECU-specific parameters, and run-time statistics.

Engine control
- Cranking control: cycle or continuous (quantity and duration fully programmable)
- Engine cooldown: smart cooldown function saves fuel and engine life.
- Successful start counter: counts and records successful engine starts
- Timers:
  - Engine cooldown timer
  - Engine maintenance timer
  - Pre-alarm time delays for weak/low battery voltage
  - Alarm time delay for overspeed
  - Alarm time delay for sender failure
  - Arming time delays after crank disconnect:
    - Low oil pressure
    - High coolant temperature
  - Pre-crank delay
  - Continuous or cycle cranking time delay
  - Programmable logic timers

FUNCTIONS, continued:

Load sharing

The MGC-3000 Series provides analog outputs to the power system in the form of analog bias signals to the voltage regulator and speed governor. When the generator breaker is closed and load sharing is enabled, the MGC-3000 Series shares the real power load proportionally with other generators in the system. Load sharing can be implemented on the Analog Load Share Line or through Ethernet communications. Reactive power (kVAR) sharing is accomplished through Ethernet communications.

Event recording

A history of system events are logged in non-volatile memory. The MGC-3000 Series retains records for 128 unique types of events. Each record tracks the number of times that an event has occurred and records a time stamp of the first and last occurrences.

A Sequence of Events (SER) log is also available. This log tracks the internal and external status of the MGC-3000 Series. Events are scanned at five millisecond intervals with 1,023 events stored per record. All changes of state that occur during each scan are time- and date-stamped. SER reports are available through BESTCOMS*Plus*®. Over 1,000 records can be retained in non-volatile memory. When the SER memory becomes full, the oldest record is replaced by the latest one acquired.

Transfer switch control (Mains failure)

The MGC-3000 Series has the ability to detect a mains failure via a single- or three-phase bus input. A mains failure is established when any one of the following conditions are met:

- Any phase of bus voltage falls below the dead bus threshold
- Any phase of bus voltage is unstable due to overvoltage or undervoltage
- Any phase of bus voltage is unstable due to overfrequency or underfrequency

When conditions are met, the MGC-3000 Series will start the generator set and, when ready, will send generator and mains breaker commands to apply power to the load from the generator set. The MGC-3000 Series implements open or closed breaker transitions to and from the mains. When the mains returns and is considered stable, the MGC-3000 Series will transfer the load back to the mains and stop the engine. During closed breaker transitions, the Auto Synchronizer can synchronize the generator to the mains before transferring the load from generator power to utility power.

ModBus™ RTU

MGC-3000 Series controllers can be monitored and controlled via a polled network using the ModBus™ protocol. The RS-485 port supports a user-selectable baud rate of 1,200, 2,400, 4,800, 9,600, 19,200, 38,400, 57,600, or 115,200. Seven or eight data bits per character can be selected. Odd, even, or no parity is supported. One or two stop bits are selectable. Please see the *MGC-3000 Series Controller Manual* for the ModBus™ register list.

Ethernet

Ethernet ports provide communications between the MGC-3000 Series and a PC via BESTCOMS*Plus*® or other MGC-3000 Series controller(s) in a network. An Ethernet connection to a PC running BESTCOMS*Plus*® provides remote metering, setting, annunciation, and control of the MGC-3000 Series. Ethernet communication between MGC-3000 Series controller(s) allows for generator sequencing on an islanded system.

MGC-3000 Series controllers can be monitored and controlled via Ethernet using the ModBus™ TCP/IP.

Programmable logic

The MGC-3000 Series offers a very powerful, yet easy-to-use, programmable logic scheme, BESTlogic™*Plus*, for custom programming of the various inputs, outputs, alarms, and pre-alarms. It allows these elements to be integrated into a complete logic scheme so that the user can meet even the most complex specification. The programmable logic control includes the selection of logic gates and timers with drag-and-drop technology to make it fast and simple.

Remote display panel annunciation

(Refer to Configuration Options.)

The MGC-3000 Series can communicate to a remote display panel, Model RDP-110. This requires only two wires to annunciate all of the alarms and pre-alarms required by NFPA-110 Level I and II. External power is required.

FUNCTIONS, continued:

External modem interface

The MGC-3000 Series includes an external modem interface permitting an external modem to be connected to the MGC controller via RS-232. A dial-out modem enables remote control, monitoring, and setting of the MGC-3000 Series. When an alarm or pre-alarm condition occurs, the MGC-3000 Series can dial up to four telephone numbers in sequence until an answer is received and the condition is annunciated.

Note: Only an external modem interface is provided. The external modem must be provided by a third party.

CAN

MGC-3000 Series controllers have two separate CAN ports: CAN 1 and CAN 2. CAN 1 communicates solely with expansion modules. This port accommodates up to four AEM-2020s and up to four CEM-2020s simultaneously. CAN 2 is dedicated for communication with ECU and related devices.

SAE J1939 communications

SAE J1939 CANBus communications allows the MGC-3000 Series to communicate with the ECU to gather critical engine information like oil pressure, engine coolant temperature, RPM, battery voltage, and much more. By utilizing the ECU, the addition of analog engine senders is no longer required. This can save substantial money for the installer. It also eliminates any errors or discrepancies between the ECU data and the data displayed on the MGC-3000 Series that may be present due to analog sender inaccuracies or incompatibility. An additional benefit is access to the ECU's diagnostic troubleshooting codes (DTCs). The DTCs provide information about the engine's operating conditions and communicate this information via SAE J1939 to the MGC-3000 Series, eliminating the need for hand-held service tools to diagnose simple engine issues.

SPECIFICATIONS

Operating power

- Nominal: 12 or 24 VDC
- Range: 6 to 32 VDC
- Power consumption:
  - Sleep mode
  - Normal operational mode: For specific power consumption scenarios, refer to generator set manual.
  - Battery ride-through: withstands cranking ride-through down to 0 VDC for 50 ms (typical)

Current sensing (5 Amp CT inputs)

- Continuous rating: 0.1 to 7.5 Aac
- One second rating: 50 Aac
- Burden: 1 VA

Voltage sensing

- Range: 12 to 576 V rms, line-to-line
- Frequency range: 10 to 90 Hz
- Burden: 1 VA
- One second rating: 720 V rms

Input contacts

- Contact sensing inputs include one emergency stop input and 15 additional programmable inputs. The emergency stop input accepts normally closed, dry contacts. The remote emergency stop is limited to 75 ft. standard. Extended runs are available with an optional relay. All programmable inputs accept normally open, dry contacts. The factory may utilize up to three contact inputs.

Engine system inputs

- Fuel level sensing resistance range: 5 to 250 Ω nominal
- Coolant temperature sensing resistance range: 5 to 2,750 Ω nominal
- Oil pressure sensing resistance range: 5 to 250 Ω nominal
- Engine speed sensing:
  - Magnetic pickup or CANBus
    - Magnetic pickup voltage range: 3 to 35 V peak (6 to 70 V peak to peak)
    - Magnetic pickup frequency range: 32 to 10,000 Hz
  - Generator frequency (alternate or redundant)
    - Voltage range: 12 to 576 V rms

Output contacts

- (15) total programmable outputs: (3) 30 A @ 28 VDC and (12) 2 A @ 30 VDC
- The factory utilizes the following on each generator set which can be reprogrammed as needed:
  - (3) 30 A @ 28 VDC for Pre-start, start, and run
  - (12) 2 A @ 30 VDC for general purposes

SPECIFICATIONS, continued:

Metering

Generator voltage (rms)
- Metering range: 0 to 576 VAC (direct measurement); up to 9,999 VAC (with appropriate voltage transformer)
- Accuracy: ±1% of programmed rated voltage or ±2 VAC (subject to accuracy of voltage transformer when used)

Generator current (rms)
- Generator current is measured at the secondary windings of 5 A CTs.
- Metering range: 0 to 5,000 Aac
- CT primary range: 1 to 5,000 Aac in primary increments of 1 Aac
- Accuracy: ±1% of programmed rated current or ±2 Aac (subject to accuracy of CTs)

Generator frequency
- Metering range: 10 to 90 Hz
- Accuracy: ±0.25% or 0.05 Hz

Apparent power
- Indicates total kVA and individual line kVA (four-wire, line-to-neutral or three-wire, line-to-line).
- Accuracy: ±2% of the full-scale indication or ±2 kVA

Power factor
- Metering range: 0.2 leading to 0.2 lagging
- Accuracy: ±0.01

Real power
- Indicates total kW and individual line kW (four-wire, line-to-neutral or three-wire, line-to-line)
- Accuracy: ±2% of the full-scale indication or ±2 kW

Oil pressure
- Metering range: 0 to 145 psi or 0 to 1,000 kPa
- Accuracy: ±3% of actual indication or ±2 psi or ±12 kPa (subject to accuracy of sender)

Coolant temperature
- Metering range: 0 °C to 204 °C (32 °F to 410 °F)
- Accuracy: ±2% of actual indication or ±2° (subject to accuracy of sender)

Fuel level
- Metering range: 0 to 100%
- Accuracy: ±2% (subject to accuracy of sender)

Battery voltage
- Metering range: 6 to 32 VDC
- Accuracy: ±2% of actual indication or ±0.2 VDC

Engine RPM
- Metering range: 0 to 4,500 rpm
- Accuracy: ±2% of actual indication or ±2 rpm

Maintenance timer
- Maintenance timer indicates the time remaining until generator set service is due. Value is retained in non-volatile memory.
- Metering range: 0 to 5,000 h; Update interval: 6 min
- Accuracy: ±1% of actual indication or ±12 min

Generator protection functions

Overvoltage (59) and undervoltage (27)
- Pickup range: 0 to 576 VAC
- Activation delay range: 0 to 600 s

Overfrequency (81O) and underfrequency (81U)
- Pickup range: 37.5 to 66 Hz
- Pickup increment: 0.01 Hz
- Activation delay range: 0 to 600 s

Reverse and forward power (32)
- Pickup range: 0 to 200%
- Pickup increment: 0.1%
- Activation delay range: 0 to 600 s
- Activation delay increment: 0.1 s

Loss of excitation (40Q)
- Pickup range: –150 to 0%
- Pickup increment: 0.1%
- Activation delay range: 0 to 600 s
- Activation delay increment: 0.1 s

Phase voltage imbalance (47)
- Pickup range: 5 to 150 VAC
- Pickup increment: 1 VAC
- Activation delay range: 0 to 600 s
- Activation delay increment: 0.1 s

Overcurrent (51)
- Pickup range: 0.9 to 7.75 Aac (5 A current sensing)
- Time dial range: 0 to 7,200 s (fixed time curve), 0 to 9.9 (inverse curve time multiplier)
- Inverse time curves: 16: Selectable time overcurrent characteristic curves.

SPECIFICATIONS, continued:

Generator protection functions, continued:

Vector shift (78)
- Pickup range: 2 to 90°
- Pickup increment: 1°
- Accuracy: ±1°

ROCOF (81R)
- Pickup range: 0.2 to 10 Hz/s
- Pickup increment: 0.1 Hz/s
- Activation delay range: 0 to 10,000 ms
- Activation delay increment: 1 ms

Environment
- Temperature
  - Operating: -40 °C to 70 °C (-40 °F to 158 °F)
  - Storage: -40 °C to 85 °C (-40 °F to 185 °F)
- Humidity: IEC 68-2-38
- Salt fog: IEC 60068
- Ingress protection: IEC IP56 for front panel
- Shock: 15 G in 3 perpendicular planes
- Vibration: 3 to 25 Hz at 1.6 mm (0.063 in) peak amplitude
  25 to 2,000 Hz at 5 G

Agency approvals
- UL/CSA approvals: “cURus” approved to UL 6200 and CSA C22.2 No.14
- NFPA compliance: complies with NFPA Standard 110, standard for emergency and standby power
- CE marked: complies with applicable EC directives

ADDITIONAL SPECIFICATIONS

Battery backup for real time clock
The MGC-3000 Series provides a real-time clock with an internal backup battery. The battery will maintain timekeeping for approximately five years (depending on conditions) after power is removed from the controller. The clock is used by the event recorder and sequence of events functions to time-stamp events, and the exercise timer is used to start and stop the generator set when the exercise feature is utilized.

Breaker management
MGC-3000 Series units are capable of controlling the generator breaker and the mains breaker. Once it is determined that a breaker close request is valid, the MGC-3000 Series attempts to operate the breaker. The user can choose to control only the generator breaker, both breakers, or none at all. Breaker management settings can be configured using BESTCOMS*Plus*® or using the front panel interface.

Synchronizer
The MGC-3000 Series has an integrated automatic synchronizer to perform synchronization. The controller monitors the voltages, frequencies, and phase relationships of both the generator and the bus. It then sends a signal to the governor to increase or decrease the speed of the engine to match the generator frequency and phase angle to the bus frequency and phase angle. It also sends a signal to the voltage regulator to match the voltage levels. Once all of these conditions are met, the controller sends a breaker close signal to the generator circuit breaker.

There are two types of automatic synchronizers available. A phase lock type of automatic synchronizer controls the frequency of the generator and brings it into the predetermined phase angle window. When a time delay expires while in the window, the close signal is given to the generator circuit breaker. The anticipatory style of automatic synchronizer controls the slip frequency between the generator and the bus. The synchronizer calculates the timing of the closing signal to allow the generator breaker to be closed when the phase angle between the two sources is at zero degrees. This calculation takes into account the slip rate, the generator breaker closing time, and the phase angle difference.

ADDITIONAL SPECIFICATIONS, continued:

Multigen Management

Enabling sequencing on a networked group of load share units allows these units to manage load by starting and stopping appropriate units based on a factor of load demand and available capacity. The mode of operation is used to determine the order in which each generator in a group will contribute to the system's power production upon a demand start/stop request.

Modes of operation include:

- Staggered service time
- Balanced service time
- Largest size first
- Smallest size first
- Smallest unit ID

OPTIONAL ACCESSORIES

(Refer to *Configuration Options)*

Analog Extension Module 2020 (AEM–2020)

The optional AEM-2020 is a remote auxiliary device that provides additional MGC-3000 Series analog inputs and outputs. With the MGC-3000 Series, it is possible to have up to four AEM-2020s. Its features include:

- **Eight analog inputs:** The AEM-2020 provides eight analog inputs that are user-selectable for 4 to 20 mA or 0 to 10 VDC. Each analog input has under/over thresholds that can be configured as status only, alarm, or pre-alarm. When enabled, an out-of-range alarm alerts the user of an open or damaged analog input wire. The label text of each analog input is customizable.
- **Eight Resistance Temperature Detector (RTD) Inputs:** The AEM-2020 provides eight user-configurable RTD inputs for monitoring generator set temperature. Each RTD input can be configured as status only, alarm, or pre-alarm to protect against high or low temperature conditions. When enabled, an out-of-range alarm alerts the user of an open or damaged RTD input wire. The label text of each RTD input is customizable.
- **Two thermocouple inputs:** The AEM-2020 provides two thermocouple inputs for monitoring generator set temperature. Each thermocouple input can be configured as status only, alarm, or pre-alarm to protect against high or low temperature conditions. When enabled, an out-of-range alarm alerts the user of an open or damaged thermocouple input wire. The label text of each thermocouple input is customizable.
- **Four analog outputs:** The AEM-2020 provides four analog outputs that are user-selectable for 4 to 20 mA or 0 to 10 VDC. A wide selection of parameters including oil pressure, fuel level, generator voltage, and bus voltage can be configured as analog outputs. Refer to *Section 4, BESTCOMSPlus® Software* of the *MGC-3000 Series Controller Manual*, for a full list of parameter selections.
- **Communications via CANBus:** A Control Area Network (CAN) is a standard interface that enables communication between the AEM-2020 and the MGC-3000 Series.

OPTIONAL ACCESSORIES, continued

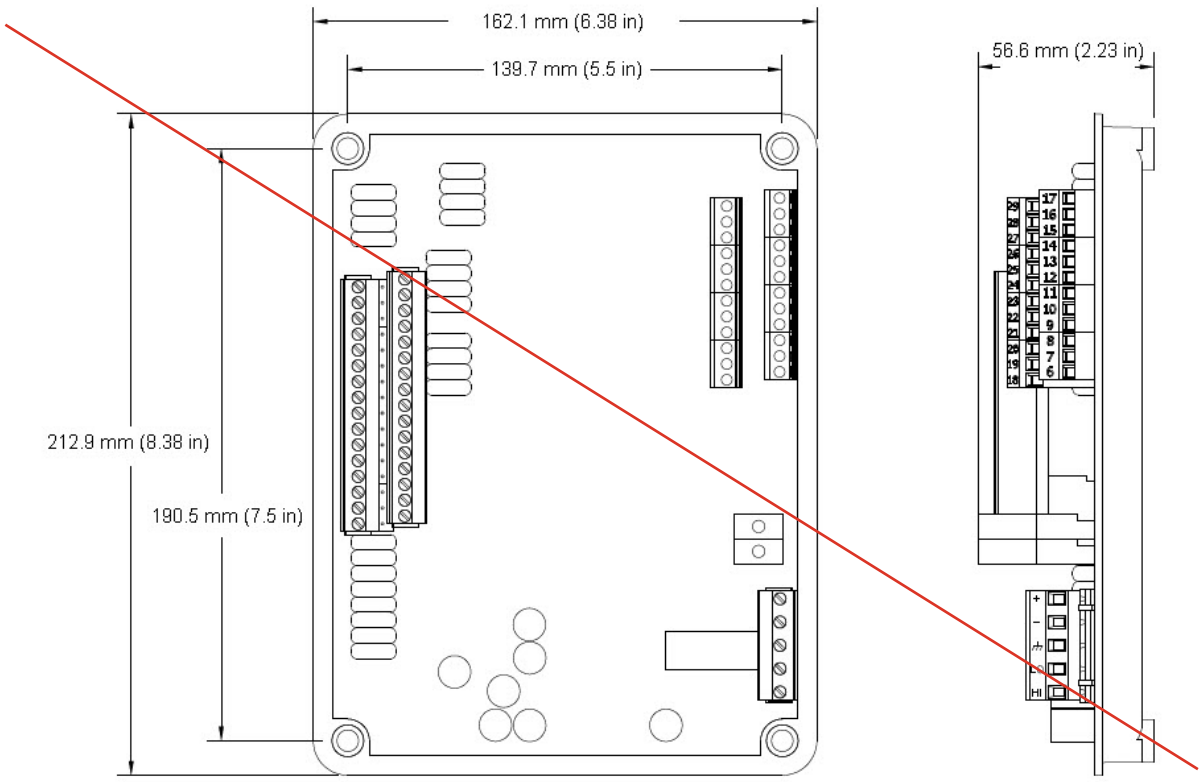

Figure 6: Input and Output Terminals

Contact Expansion Module 2020 (CEM-2020)

The CEM-2020 is a remote device that provides additional MGC-3000 Series contact inputs and outputs, giving the user flexibility to use the same model MGC-3000 Series generator set controller for simple or more complicated applications that require contact functionality or duplication of contacts for remote annunciation. With the MGC-3000 Series, it is possible to have up to four CEM-2020s. Its features include:

- **10 Contact Inputs:** The CEM-2020 provides 10 programmable contact inputs with the same functionality as the contact inputs on the MGC-3000 Series.
- **24 Contact Outputs:** The CEM-2020 provides 24 Form C programmable contact outputs with the same functionality as the output contacts on the MGC-3000 Series. The output ratings of the Form C contacts are:

Output No.	Rating (Cont.)	Additional Information
1–12	1 A @ 30 VDC	This is a gold flash contact for low current circuits.
13–24	4 A @ 30 VDC	

OPTIONAL ACCESSORIES, continued:

- **Communications via CANBus:** The CEM-2020 communicates to the MGC-Series 3000 via SAE J1939 CANBus communications and allows the user to program the functionality of these inputs and outputs in the BESTCOMS*Plus*® software.
- The user can add labels for the inputs and outputs that appear in BESTCOMS*Plus*®, on the front panel, and in programmable logic. All the functionality can be assigned to these inputs and outputs as if they were an integrated part of the MGC-3000 Series. The CEM-2020 module has all of the environmental ratings of the MGC-3000 Series, including a model for UL Class1 Div2 applications. The CEM-2020 terminals accept a maximum wire size of 12 AWG, while the chassis ground requires 12 AWG wire. Flexibility is one of the benefits of the MGC-3000 Series, and this add-on module enhances that benefit even further.

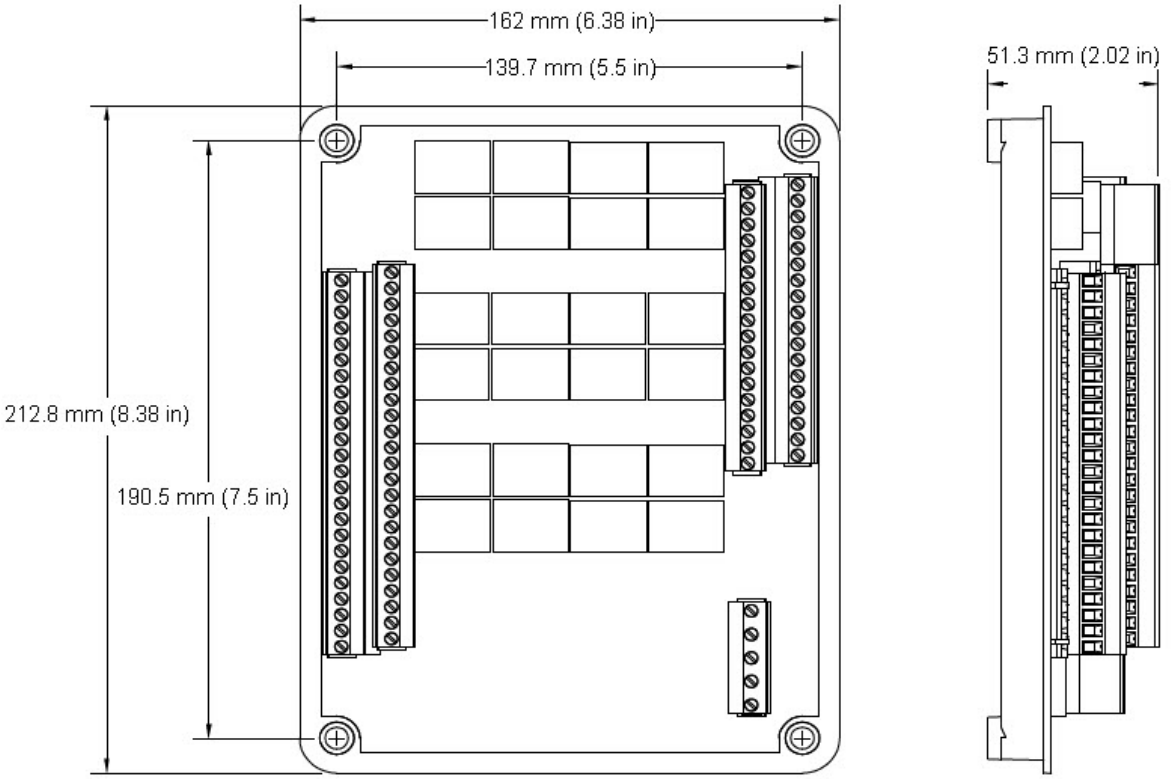

Figure 7: CEM-2020 Overall Dimensions

Control Station Data Sheet

Break Glass Pushbutton

DESCRIPTION

The break glass pushbutton control station is designed for special applications in the emergency shutdown of electric circuits. The pushbutton is depressed, and the contacts are closed while the glass disc is in place. When the glass is broken with the hammer, the button returns to a normal extended position, opening the contacts. This action prevents the flow of the electric circuit during emergency shutdowns.

This control station with operators includes control station enclosure, emergency break glass pushbutton operator, hammer, and five glass discs.



FEATURES

- Heavy-duty indoor/outdoor constructed enclosure
- One or two snap-action contact blocks
- “STOP” legend

SPECIFICATIONS

- ***mtu*** Part Number: SUA35133
- Enclosure Material: Die cast zinc (painted red)
- Weight: 1.47 kg (3.25 lbs)
- Size: 30 mm (1.18 in)
- Contact Configuration: 1 N.O. / 1 N.C.
- Terminal Type: Screw clamp
- Enclosure Rating: NEMA 3/4/13
- Maximum Voltage Rating: 300 V
- Ampere Rating: 10 Amps
- Ratings: UL Listed, CE Marked, CSA Certified

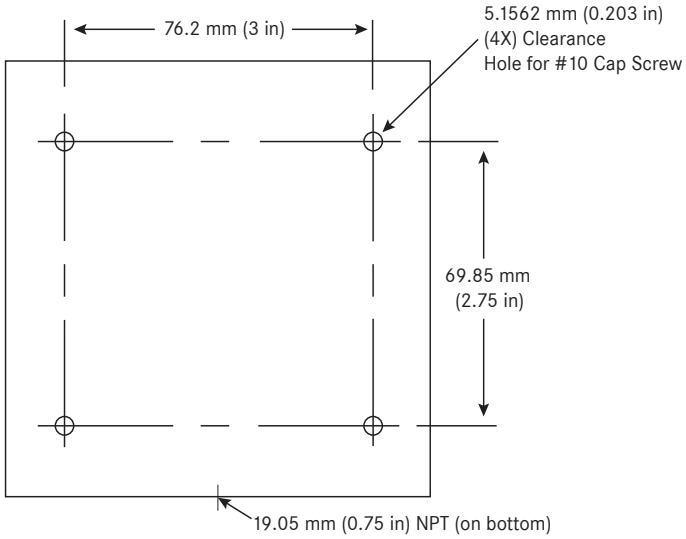

Figure 1: Mounting Dimensions

Subject to change. | WT00032338 | 2021-09

Control System Data Sheet

ProtoNode

The ProtoNode solution is pre-programmed to provide a virtual plug-and-play, complete protocol BACnet MS/TP, BACnet/IP, and EtherNet/IP. There are no configuration files to download in the field, and all configurations are available to the user/installer. Simply adjust the settings by connecting to the IP address of the unit with a standard web browser.



FEATURES

- Designed to translate MGC Series Generator Set Controller Modbus TCP to BACnet MS/TP, BACnet/IP, or Ethernet/IP
- Supports over 6,500 MGC Series data points
- BACnet change of value (COV) support provides fast data communication while reducing the traffic over a BACnet network
- BACnet BBMD Server support for connecting to remote BACnet networks

SPECIFICATIONS

mtu part number

X00E30900175

Power requirements

Supply voltage: 24 VAC 0.125 A, 12-24 VDC 0.25 A
Current draw: 3 W @ 12 V*
*Supports both Full-Wave and Half-Wave AC

Environmental

Operating temperature: -20 °C to 70 °C (-4 °F to 158 °F)
Relative humidity: 10-95% RH, non-condensing

Dimensions

Width: 28 mm (1.1 in)
Height: 101.6 mm (4 in)
Depth: 76.2 mm (3 in)

BACnet support

- BACnet COVs, trend logging, BBMD, and optional BACnet router support
- Supports up to 10,000 BACnet objects
- Settings changed with a standard web browser

ProtoNode	Interface Connections		Point Count		
	RS-485	Ethernet	Level I	Level II	Level III
FPC-N54	2	1	1,500	5,000	10,000

CERTIFICATIONS AND STANDARDS

- BTL marked - BACnet Testing Labs (BTL) B-ASC Ver. 12
- cTUVus certified to UL 916 and CSA C22.2 No. 205
- CE marking
- RoHS compliant
- FCC compliant

A Rolls-Royce solution

DIMENSIONS

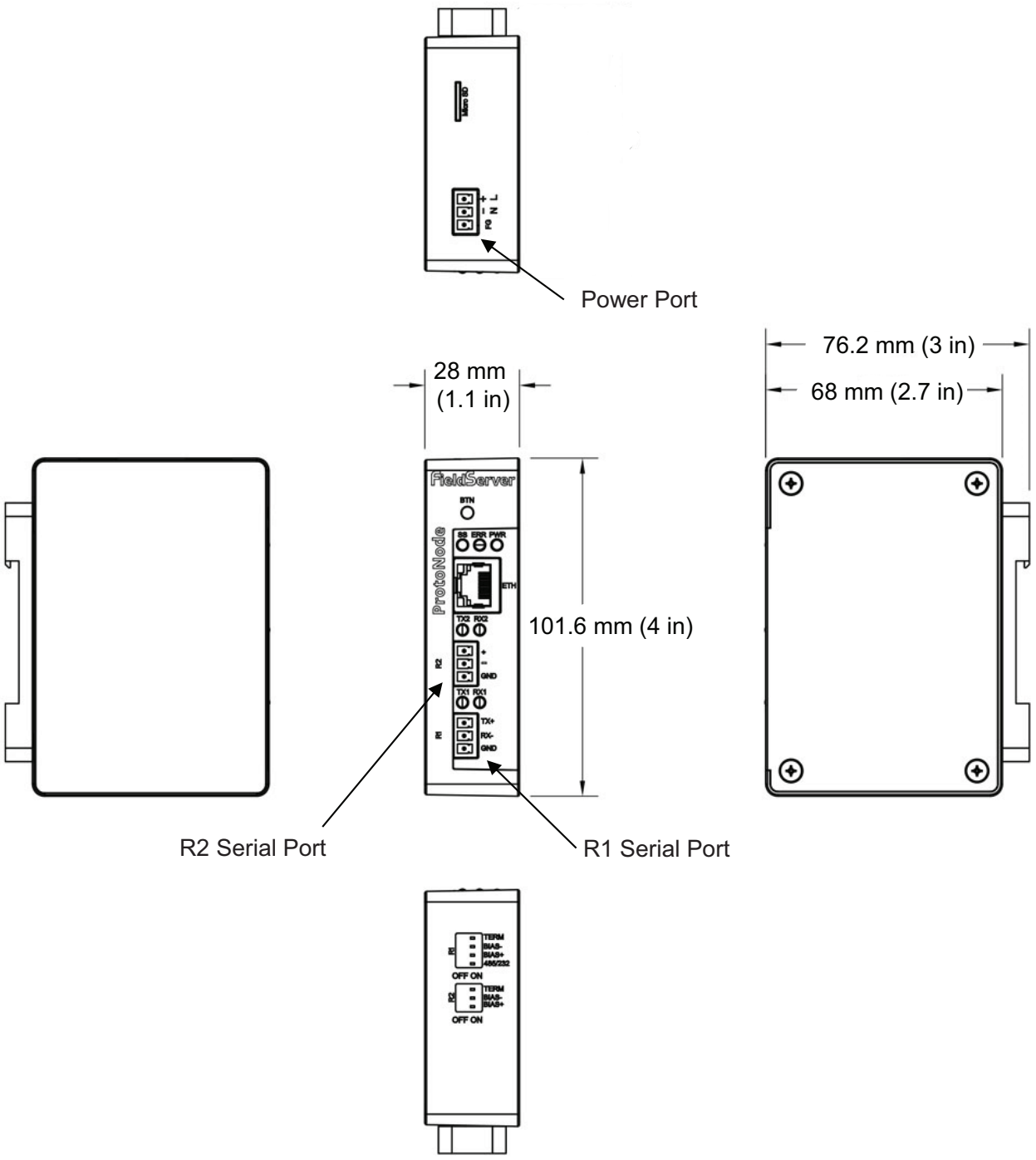

Figure 1: ProtoNode FPC-N54 Dimensions

Subject to change. | 2026-07

Remote Display Panel Data Sheet

RDP-110C Annunciator

DESCRIPTION

The RDP-110C is a remote annunciation device used in conjunction with digital generator set controllers to provide remote annunciation of the emergency standby generator system. This panel allows for two programmable alarms, two programmable pre-alarms, and is compatible with NFPA 110. The digital generator set controller detects an alarm or pre-alarm condition and communicates via RS-485 to the RDP-110C. The RDP-110C is available with a universal configuration that can be surface- or semi-flush-mounted.



Image for illustration purposes only.
Refer to dimensional drawings on page 3.

HIGHLIGHTS

- Annunciation of eight alarms and seven pre-alarms as detected by the digital generator set controller
- Four programmable LEDs via BESTlogic™ *Plus*
- RS-485 communications reduces the number of interconnection wires to four
- Interconnect distance up to 1,219 m (4,000 ft)
- UL Listed
- CSA Certified

STANDARD FEATURES

- Eight LED alarms
  - Low coolant level
  - Low oil pressure
  - Engine overspeed
  - Fuel leak*
  - High coolant temperature
  - Engine overcrank
  - Emergency stop activated
  - Sender failure*
- Seven LED Pre-Alarms
  - High coolant temperature
  - Low oil pressure
  - Battery overvoltage*
  - Battery charger failure*
  - Low coolant temperature
  - Low fuel level
  - Weak battery
- Three LED operating conditions
  - Switch not in auto
  - EPS supplying load
  - Display panel on
- Audible alarm horn rated at 90 dB (from a distance of two feet)
- Lamp test and alarm silence
- Power supply inputs for 12 VDC or 24 VDC
- Surface- or semi-flush-mounted
- Conduit box included
- Designed for use in harsh environments
- Interconnect distance up to 1,219 m (4,000 ft)
- UL Listed
- CSA Certified

* Pre-configured, but can be reprogrammed and relabeled to match the function of the indicator.

SPECIFICATIONS

Ordering Information

mtu part number: X00A30900392

Power Input

— DC voltage: 8 to 32 VDC (2W)

Environmental and Physical

— Operating temperature: -40 °C to 70 °C (-40 °F to 158 °F)
— Storage temperature: -40 °C to 85 °C (-40 °F to 185 °F)
— Salt fog: qualified to ASTM 117B-1989
— Vibration: The device withstands 2 g in each of the three mutually perpendicular planes, swept over the range of 10 to 500 Hz for a total of six sweeps, 15 minutes each sweep, without structural damage or degradation of performance.
— Shock: 15 g
— Weight: 1.04 kg (2.3 lb)

Agency Approvals

— NFPA 110 Level 1 compliant
— UL Listed to UL 6200, file E97035
— CSA Certified to CSA C22.2 No. 14, file LR 23131

Connections

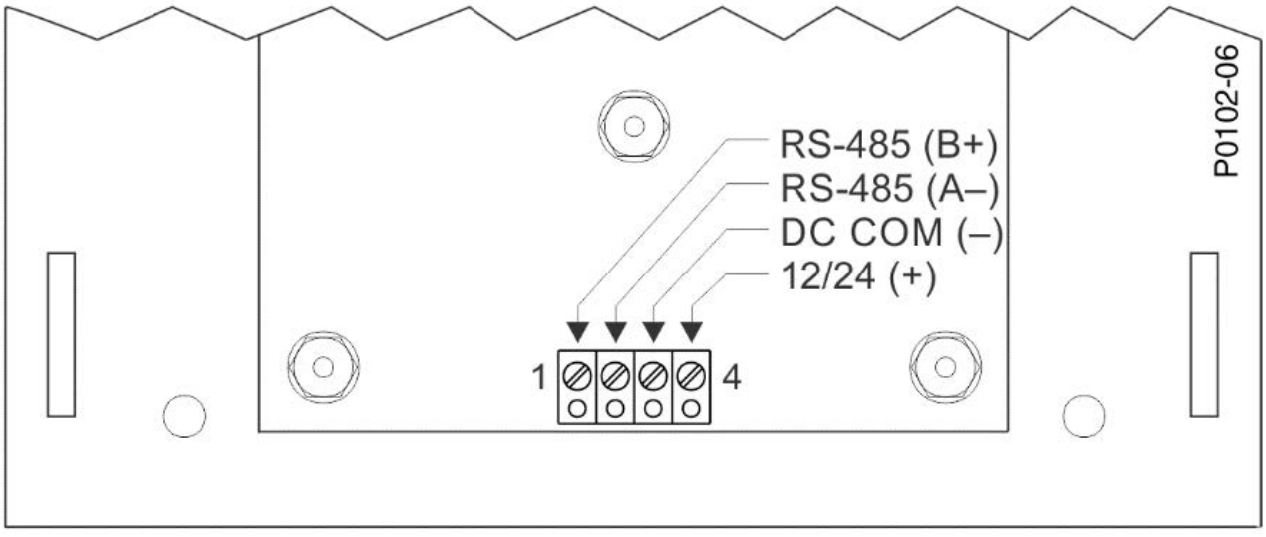

Figure 1: RDP-110C Circuit Board Connections

DIMENSIONS

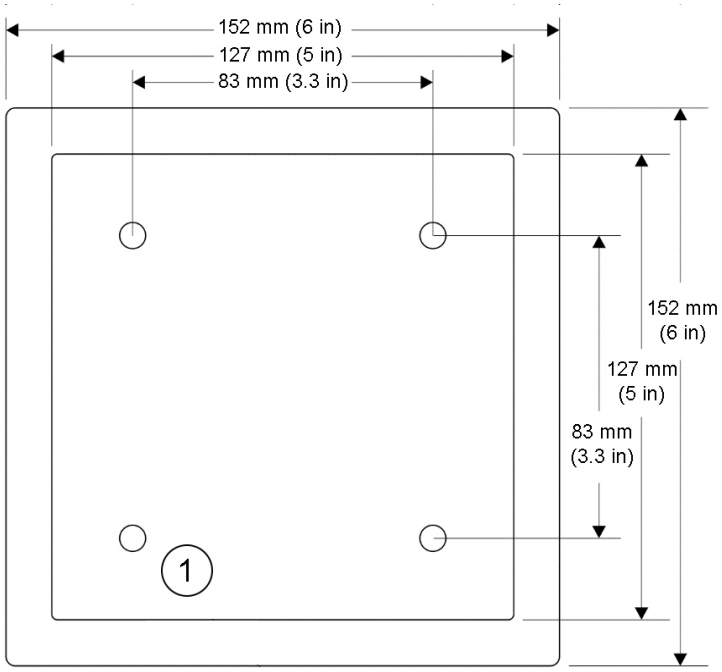

Figure 2: RDP-110C Mounting Dimensions (Rear Panel)

1. Mounting hole diameter (4 places, on rear wall of enclosure) is 7 mm (0.281 in).

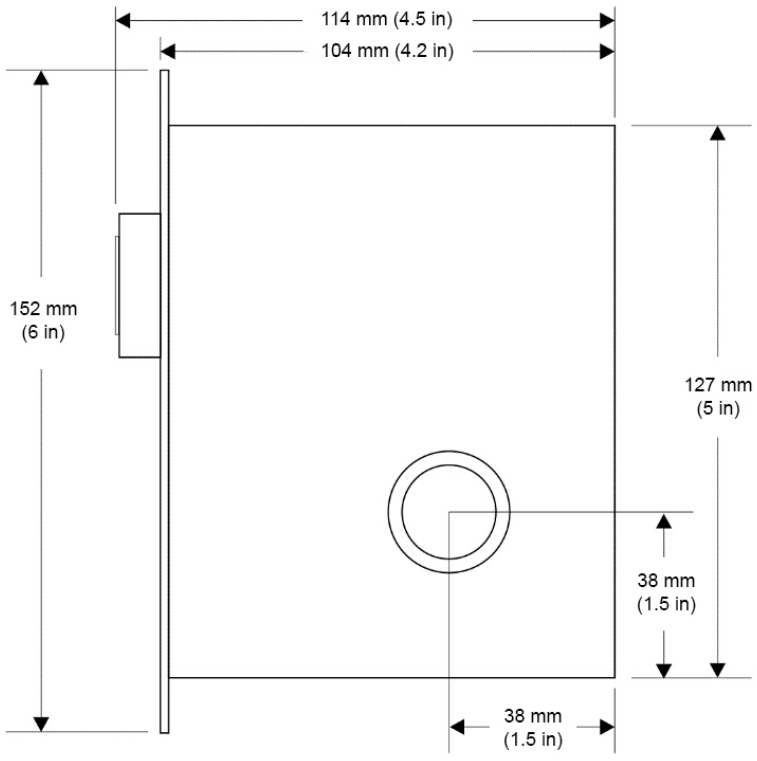

Figure 3: RDP-110C Mounting Dimensions and Knockout Locations (Left Side)

PANEL DISPLAY

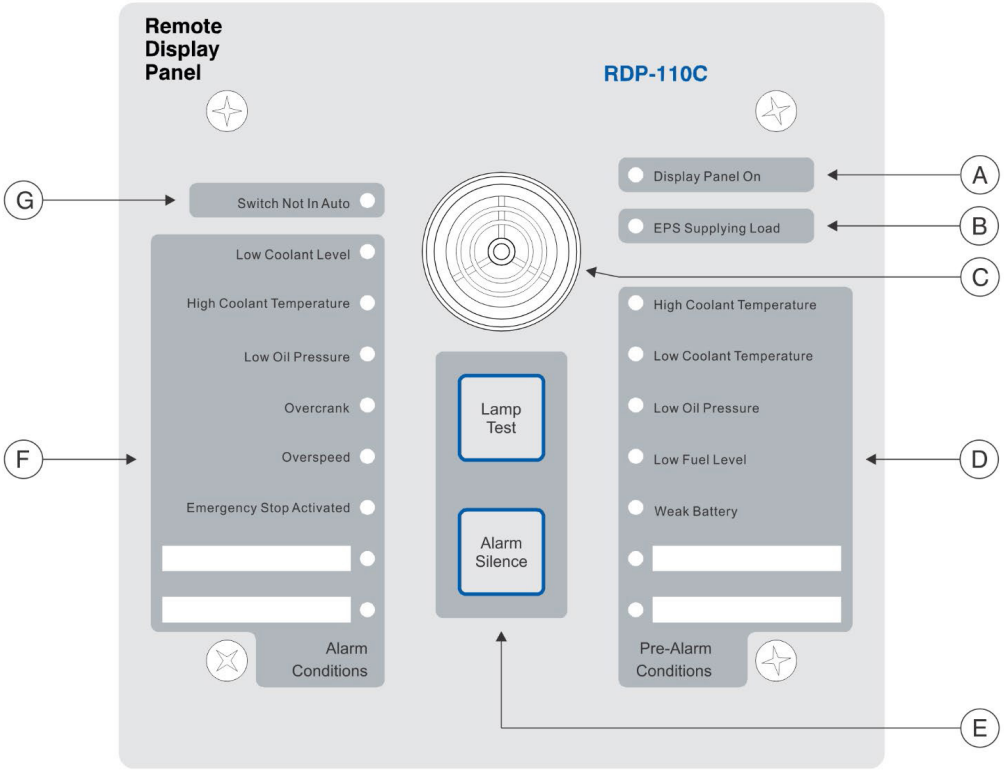

Figure 4: RDP-110C Front Panel Controls and Indicators

A. Green LED lights when power is applied to the RDP-110C.
B. Green LED lights when the generator set is supplying more than 2% of rated load.
C. The horn sounds when an alarm or pre-alarm exists or the connected digital generator set controller is not operating in Auto mode.
D. Amber Pre-Alarm LEDs light when the corresponding pre-alarm setting is exceeded.
E. RDP-110C controls consist of two push-buttons. The Alarm Silence pushbutton silences the horn. The Lamp Test push-button can be used to verify operation of all RDP-110C LEDs and the horn.
F. Red Alarm LEDs light when the corresponding alarm setting is exceeded.
G. Red LED lights when the digital generator set controller is not operating in Auto mode.

Subject to change. | WT000050380 | 2021-03

1000A-1200A P-FRAME ENCLOSURE

- Left side controls shown. Right side controls optional.
- Reference Figure 6 for available breaker mounting positions.

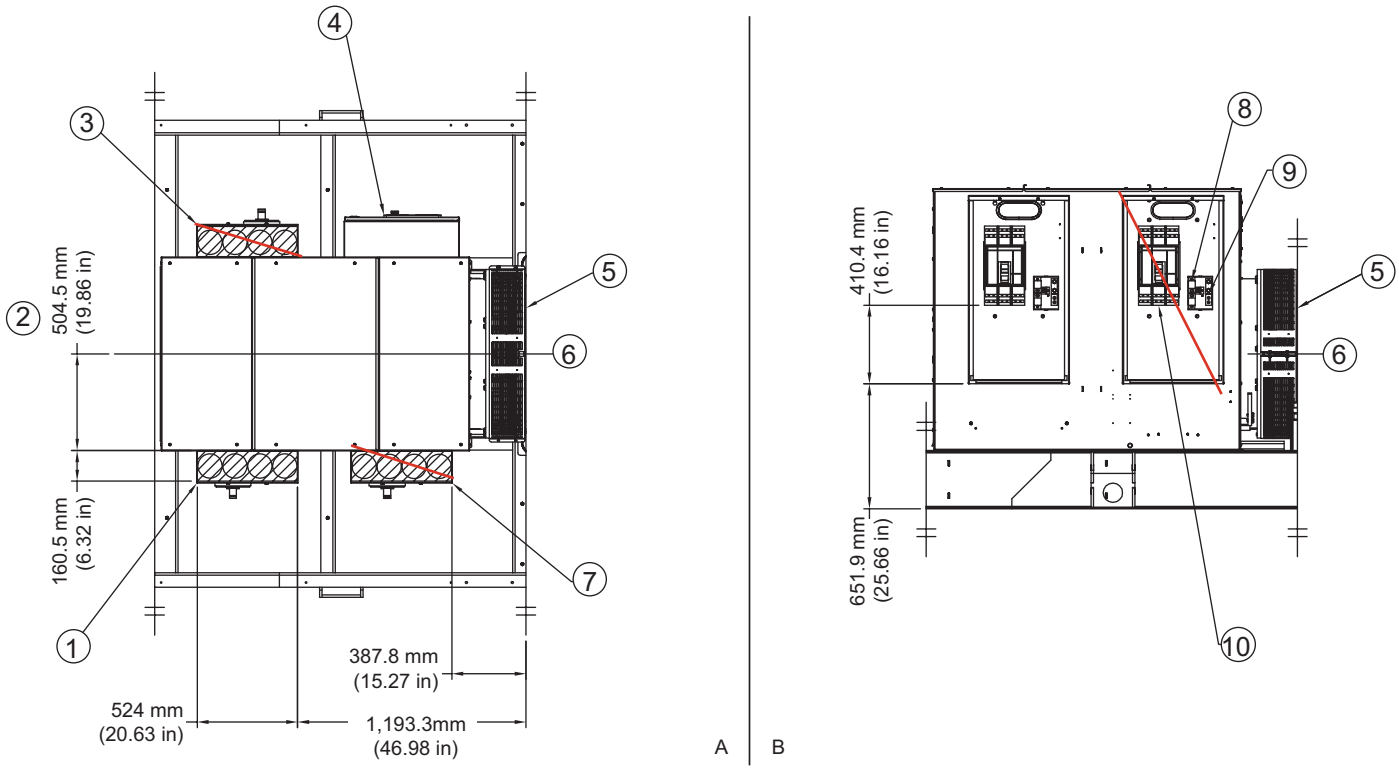

Figure 4: 1000A-1200A P-Frame Enclosure

A. Top view, bottom entry conduit area
B. Right view, breaker enclosure detail (enclosure cover not shown)

1. Breaker position one
2. Breaker extension box adds 390 mm (15.35 in), if configured
3. Breaker position two
4. Controls position
5. Rear face of flywheel housing
6. Generator centerline
7. Breaker position three
8. Neutral wire binding torque: 375 lb-in
9. Equipment ground wire binding torque: 275 lb-in
10. Customer connect end breaker wire binding torque: 442 lb-in

Circuit Breaker Enclosure Data Sheet - Diesel
750-900 kW Standby

Available Circuit Breakers		Enclosure Data			
Breaker Frame	Amperage	Output Wire Range 90 °C Cu (wires per lug)	Wire Bending Space[1] mm (in)	Conduit Quantity	Conduit Size[2] in
H-Frame	20-150	(1) 8-3/0	591 (23.27)	1	2
J-Frame	175	(1) 4-4/0	577 (22.72)	1	2.5
J-Frame	200-250	(1) 3/0-350	577 (22.72)	1	3
L-Frame 100%	300-400	(2) 2/0-500	502 (19.76)	2	3.5
L-Frame 80%	300-600	(2) 2/0-500	502 (19.76)	2	3.5
M/P-Frame	250-800	(3) 3/0-500	466 (18.35)	3	3.5
P-Frame	1,000-1,200	(4) 3/0-500	466 (18.35)	4	3.5
R/MTZ-Frame	1,600-2,500	(8) 1/0-750	604 (23.78)	8	4
R-Frame 80%	3,000	(8) 1/0-750	604 (23.78)	8	4
R/MTZ-Frame 100%	3,000	(9) 1/0-750	604 (23.78)	9	4

[1] Meets or exceeds NFPA 70, NEC 312.6(A), and NEC 312.6(B)
[2] Based on flexible metal conduit at 40% fill using THHN wire

NOTE: Equipment grounding terminal wire range: 2 AWG - 600 kcmil

Table 1: Enclosure Data

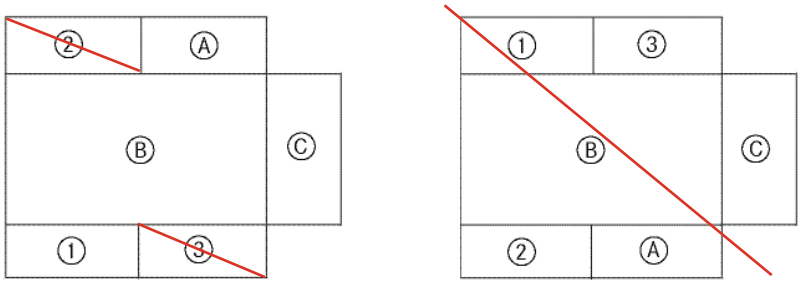

Figure 6: Available Breaker Mounting Positions

A. Controls
B. Outlet box
C. Alternator

1. Position 1
2. Position 2
3. Position 3

Breaker Frame Size	Position 1 (Primary)	Position 2	Position 3
H	X	X	X
J	X	X	X
L	X	X	X
M	X	X	X
P	X	X	X
R	X	X	N/A
MTZ	X	X	N/A

Table 2: Available Breaker Mounting Positions

Subject to change. | WT00058898 | 2021-10

Electrical System Data Sheet

ERMS Switch

The Energy Reduction Maintenance Setting (ERMS) switch is used to reduce the current and/or time required to trip a circuit breaker. It does this by reducing the instantaneous protection setting of the breaker, allowing reduction of the fault clearing time and a faster trip. If a fault occurs when the switch is engaged, Arc Flash Incident Energy (AFIE) level exposure is reduced.





FEATURES

The ERMS function is available on circuit breakers equipped with:

- BCM ULP with firmware version 4.1.0 and above
- Micrologic P or H trip unit with the blue ERMS label as shown in Figure 1 (A)
- IO module with application switch set to position 3

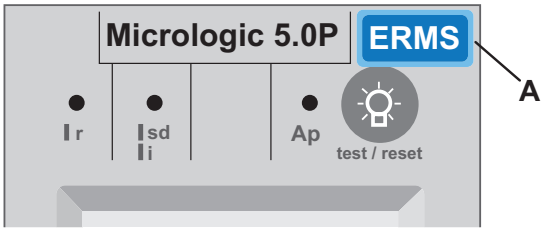

Figure 1: ERMS label on trip unit

Required for installation

(included with ERMS breaker)

- PowerPact or Masterpact circuit breaker with P or H trip unit with ERMS label (see Figure 1)
- Instruction sheet
- ERMS hazard label
- ERMS switch label
- ERMS light label
- Remote setting utility (RSU) 8.5.1 (on memory stick)
- Switch with blue indicator light (24 VDC)
- Switch contact block
- Padlock attachment
- Remote pilot light (blue)
- IO module
- ULP cord (male-to-male RJ45)
- Circuit breaker ULP cord
- ULP terminator

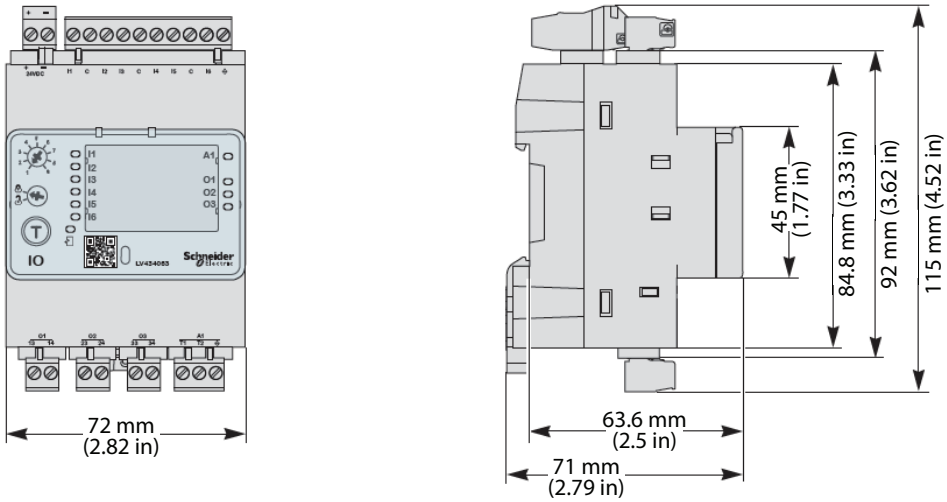

Figure 2: Dimensions

A Rolls-Royce solution

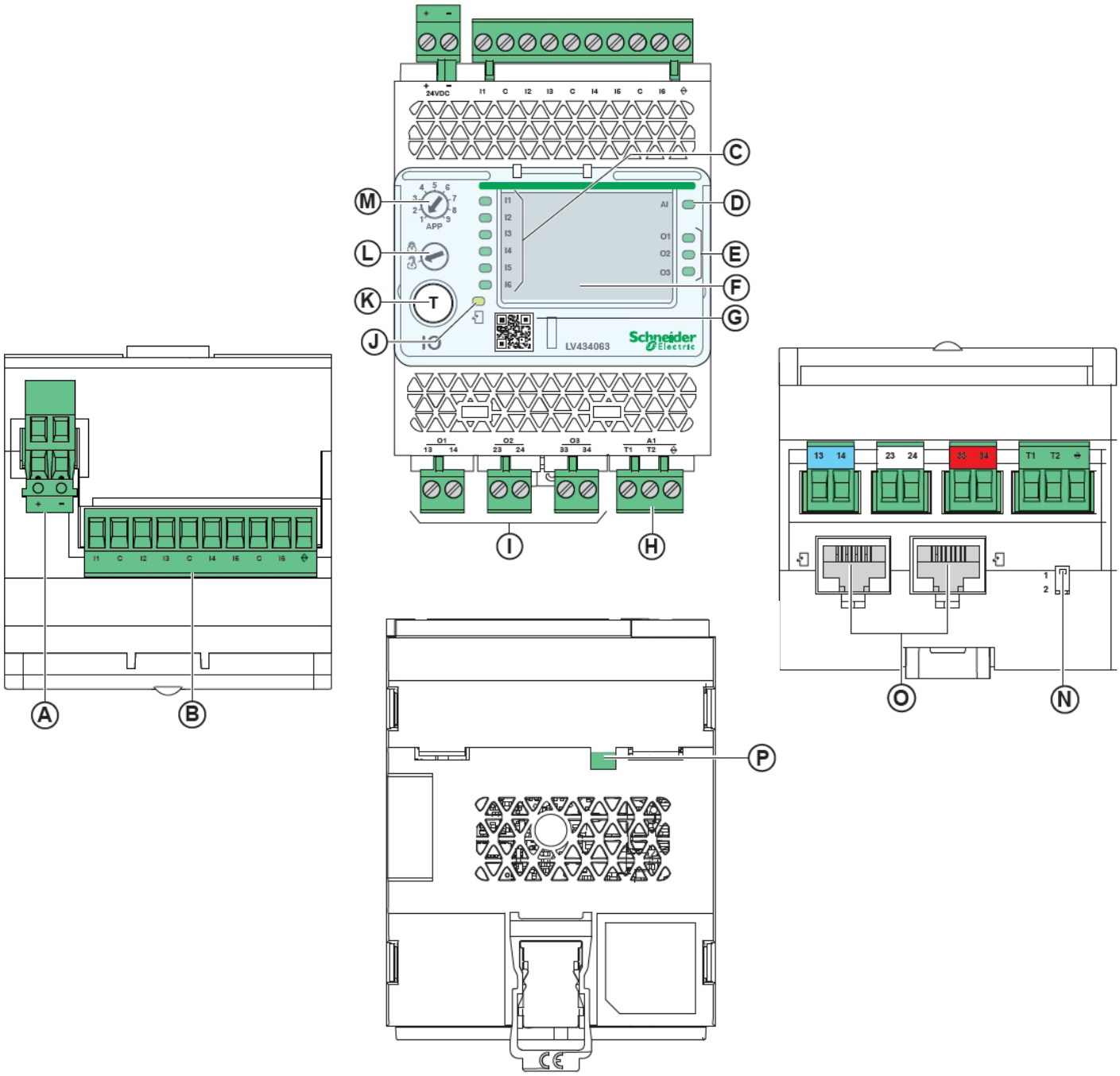

Figure 3: Diagram

A. 24 VDC power supply terminal block
B. Digital input terminal block: Six inputs, three commons, and one shield
C. Six input status LEDs
D. Analog input status LED
E. Three output status LEDs
F. I/O identification labels
G. Sealable transparent cover
H. Analog input terminal block
I. Digital output terminal blocks
J. ULP status LED
K. Test/reset button (accessible with cover closed)
L. Setting locking pad
M. Application rotary switch: 1 to 9
N. Switch for IO module addressing (IO module 1 or IO module 2)
O. Two RJ45 ULP ports
P. Grounding connection

Subject to change. 2020-07

Distribution Panel Data Sheet

125 A, 1 PH, NEMA 3R, 210–900 kW Diesel and Gas

DESCRIPTION

The distribution panel provides a single-point connection from a main load center to factory-installed accessories. This is an optional accessory for 210–900 kW diesel and gas generator sets.*



FEATURES

- Surface-mount cover
- Corrosion-resistant galvanized enclosure with baked enamel finish

SPECIFICATIONS

- Ampere rating: 125 A
- Factory-installed main lugs
- Single pole circuits:
  - 1 in THQL 1P spaces (qty. 14)
- Voltage rating: 120/240 VAC, 1-phase, 3 wire
- Environmental rating: NEMA 3R outdoor rated
- Bus material: copper
- Short circuit current rating: 22 kA
- Dimensions:
  - Height: 546.1 mm (21.5 in)
  - Width: 330.2 mm (13 in)
  - Depth: 127 mm (5 in)

CERTIFICATIONS AND STANDARDS

- UL Listed or CSA Certified, depending on system configuration

NOTE:

* Also available for other applications. Contact your ***mtu*** Account Manager.

Subject to change. | WT00043039 | 2025-04

Enclosure and Sound Data Sheet - Diesel, Open Field

60 Hz: 750-900 kW Standby / 690-820 kW Prime Power for Stationary Emergency / 690-820 kW Data Center Continuous Power

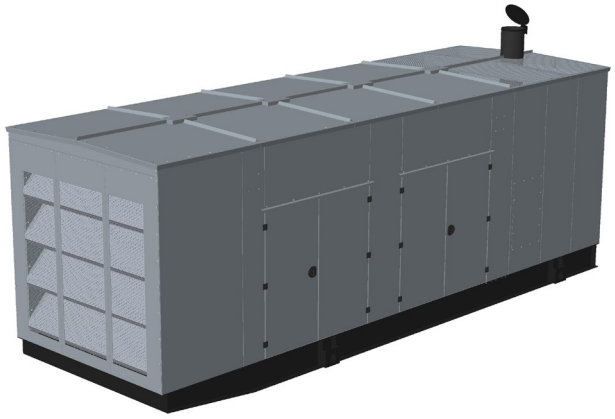

Level 1, 2, and 3 Enclosure (pictured)*

Enclosure Level Identification	
Level 1	Weather-protective enclosure constructed of heavy gauge steel or aluminum with fixed storm-proof panels. Enclosure consists of a bolted construction with an internally-mounted exhaust silencer. Hinged, lockable double-door access on both sides of the enclosure.
Level 2	Level 1 enclosure with UL 94 HF-1 compliant, 1.5" sound attenuating foam insulation installed inside enclosure walls.
Level 3	Level 2 enclosure with attenuating air intake baffles
Level 3+	Level 3 enclosure with additional sound attenuating air intake baffles and sound attenuated foam insulation installed on enclosure roof

CERTIFICATIONS AND STANDARDS

- UL 2200
- CSA C22.2 No. 100
- CSA C22.2 No. 14

STANDARD FEATURES FOR ALL LEVELS

- Heavy material construction
  - Steel enclosure: 14 gauge or greater thickness
  - Aluminum enclosure: 0.09 in or greater thickness
- 130 mph wind rating
- Service access
  - Double door access gives ease of service to all components
- Pitched roof
- Exhaust rain cap
- Scoop access panels
- Hardware
  - Powder coated hinges with stainless steel pins
  - Key-lockable and pad-lockable powder coated door handles
- Powder coat finish paint: RAL 7001 Silver Grey standard
  - Custom colors available upon request
- Internally-mounted silencer (Hospital grade)
  - Insulated exhaust pipes

A Rolls-Royce solution

Enclosure and Sound Data Sheet - Diesel, Open Field

60 Hz: 750-900 kW Standby / 690-820 kW Prime Power for Stationary Emergency / 690-820 kW for Data Center Continuous Power

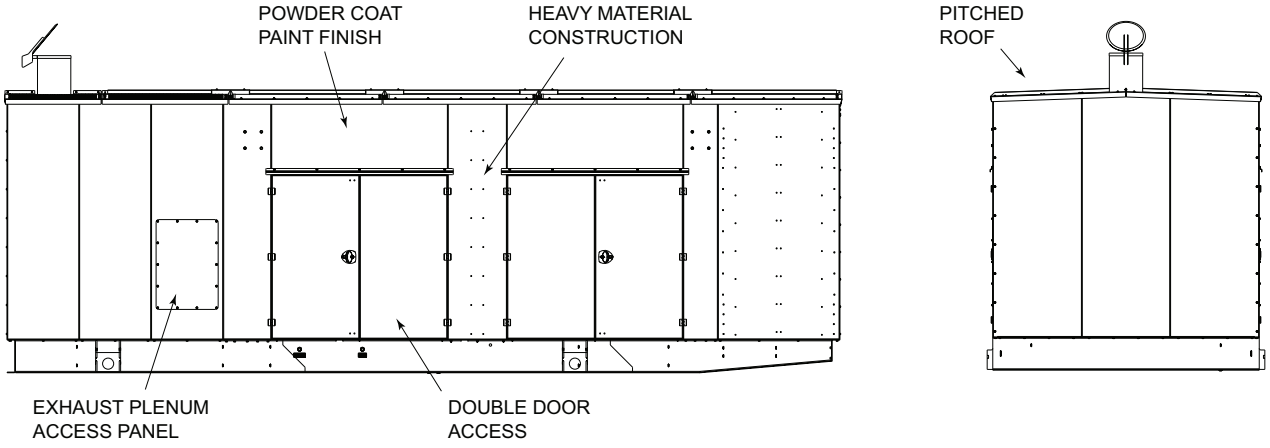

Level 1, 2, and 3 Enclosure (pictured)*

OPTIONAL FEATURES

- AC or DC LED light package
- Motorized intake louver
- Gravity exhaust louver
- Space heater
- IBC certification
- 190 mph wind rating
- For other custom options, please consult factory.

ENGINE EXHAUST SOUND RATINGS dB(A) AT 1 METER
OPU SOUND RATINGS dB(A) AT 1 METER
ENCLOSURE SOUND RATINGS dB(A) AT 7 METERS

			1 Meter		7 Meters			
Application	**Model**	**Power Node**	**Engine Exhaust[1]**	**OPU[2]**	**Level 1**	**Level 2**	**Level 3**	**Level 3+**
60 Hz Standby	***mtu*** 12V1600 DS750	750 kW	112.6	104.5	81.7	77.2	74.1	74
	mtu 12V1600 DS800	800 kW	113.2	104.2	82.4	77.2	74.4	73.8
	mtu 12V1600 DS900	900 kW	114.6	104.3	82.2	78	74.9	73.9
Application	**Model**	**Power Node**	**Engine Exhaust[1]**	**OPU[2]**	**Level 1**	**Level 2**	**Level 3**	**Level 3+**
60 Hz PPSE	***mtu*** 12V1600 DS750	690 kW	111.4	104.7	81.9	76.9	73.9	73.2
	mtu 12V1600 DS800	730 kW	111.8	104.8	81.8	77.1	73.9	73.7
	mtu 12V1600 DS900	820 kW	113	104.5	82.1	77.2	74.5	74.2
Application	**Model**	**Power Node**	**Engine Exhaust[1]**	**OPU[2]**	**Level 1**	**Level 2**	**Level 3**	**Level 3+**
60 Hz DCCP	***mtu*** 12V1600 DS750	690 kW	111.4	104.7	81.9	76.9	73.9	73.2
	mtu 12V1600 DS800	730 kW	111.8	104.8	81.8	77.1	73.9	73.7
	mtu 12V1600 DS900	820 kW	113	104.5	82.1	77.2	74.5	74.2

[1] Undampened engine exhaust noise

[2] Measurement with infinite exhaust connection

NOTE:

— Measurements include exhaust noise.
— Aluminum enclosure sound levels are approximately 2 dB(A) higher than listed sound levels for steel enclosures.
— For installations within 50 miles of the coast, aluminum enclosures are recommended to prevent accelerated corrosion.
— Sound pressure levels subject to environment, instrumentation, measurement, installation, and generator set variability.
— Generator set is tested on level ground without spring isolators installed.
— Sound power levels per ISO 8528-10 and ANSI S1.13-2005
— Sound data measured with:
  - Full-rated load
  - Standard radiator package

C/F = Consult Factory

* Note: Visual appearance may differ between power nodes.

Subject to change. | WT00058902 | 2022-05

Isolator Pad Data Sheet

DESCRIPTION

These square-molded, neoprene pads can be used to compensate for inconsistencies in the mounting surface between the generator set base frame and the installation surface, or between the sub-base fuel tank and the installation surface, if applicable. They can be easily cut to any desired shape and can be used in multiple layers to increase deflection.

NEOPRENE TYPICAL PHYSICAL PROPERTIES

Hardness:	40A-90A
Tensile Strength:	500
Elongation:	200
Tear Value:	50
Thermal Conductivity (K Factor):	0.30

Heat Resistance @ 100 °C (212 °F) after 70 Hours:

Change in Hardness:	10
Change in Tensile:	-16%
Change in Elongation:	-60%
Compression Set:	50%
Lowest Working Temperature:	-40 °C (-40 °F)
Highest Working Temperature:	90.6 °C (195 °F)

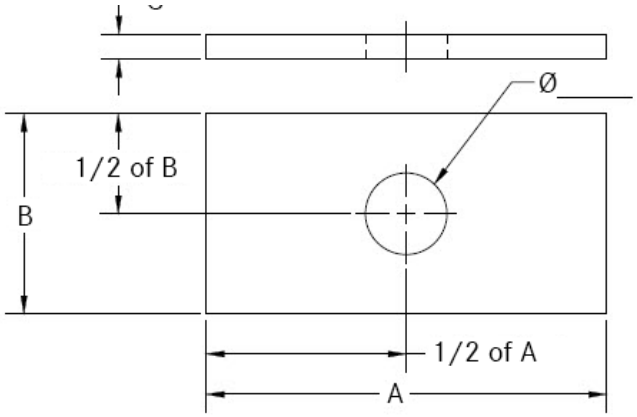

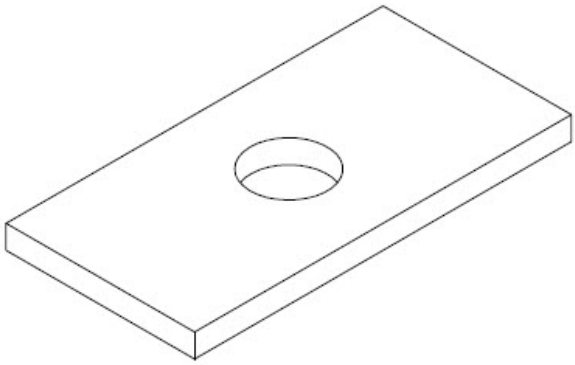

mtu Part Number	Dim. A mm (in)	Dim. B mm (in)	Dim. C mm (in)	Hole Diameter mm (in)	Durometer
SUA46904	101.6 (4)	50.8 (2)	6.35 (0.25)	20.638 (0.813)	50
SUA46905	152.4 (6)	50.8 (2)	6.35 (0.25)	20.638 (0.813)	50
SUA46906	254 (10)	50.8 (2)	6.35 (0.25)	20.638 (0.813)	50
SUA46907	457.2 (18)	63.5 (2.5)	6.35 (0.25)	20.638 (0.813)	50
SUA46908	457.2 (18)	76.2 (3)	6.35 (0.25)	20.638 (0.813)	50
SUA46909	457.2 (18)	457.2 (18)	6.35 (0.25)	Not Required	50
SUA63015	203.2 (8)	76.2 (3)	6.35 (0.25)	20.638 (0.813)	50
SUA77843	101.6 (4)	50.8 (2)	19.05 (0.75)	20.638 (0.813)	60
SUA86147	457.2 (18)	76.2 (3)	6.35 (0.25)	20.638 (0.813)	70
SUA95672	304.8 (12)	50.8 (2)	6.35 (0.25)	20.638 (0.813)	50
SUA102408	457.2 (18)	76.2 (3)	6.35 (0.25)	26 (1.024)	50
X54599100330	381 (15)	76.2 (3)	6.35 (0.25)	22.225 (0.875)	50

Subject to change. | WT00038043 | 2021-10

ROLLS-ROYCE SOLUTIONS AMERICA INC.

Standby Power Limited Warranty

Rolls-Royce Solutions America Inc. ("RRSA") issues the following express Limited Warranty subject to the following terms, conditions, and limitations:

An original consumer ("Owner") who purchases an RRSA engine generator set ("Product") is entitled to coverage under this Limited Warranty. RRSA warrants to the Owner that the Product is free of defects in material and workmanship and will perform under normal use and service from valid start-up performed by RRSA. Any nonconformity to the foregoing is defined as a Warrantable Defect.

1. Disclaimers

LIMITATION OF WARRANTIES: THIS LIMITED WARRANTY IS GIVEN EXPRESSLY AND IN PLACE OF ALL OTHER WARRANTIES, EXPRESS OR IMPLIED, INCLUDING ANY IMPLIED WARRANTIES OF MERCHANTABILITY OR FITNESS FOR PARTICULAR PURPOSE, FREEDOM FROM INFRINGEMENT OR THIRD-PARTY INTELLECTUAL PROPERTY RIGHTS, OR ARISING FROM COURSE OF DEALING, COURSE OF PERFORMANCE OR USAGE OF TRADE. THERE ARE NO UNDERSTANDINGS, AGREEMENTS, REPRESENTATIONS, OR WARRANTIES NOT SPECIFIED HEREIN.

THIS LIMITED WARRANTY, THE OBLIGATIONS OF RRSA AND THE RIGHTS AND REMEDIES OF THE OWNER SET FORTH IN THIS LIMITED WARRANTY ARE EXCLUSIVE AND ARE EXPRESSLY IN LIEU OF, AND THE OWNER HEREBY WAIVES AND RELEASES ALL OTHER OBLIGATIONS, WARRANTIES (INCLUDING WARRANTY AGAINST REDHIBITORY DEFECTS), REPRESENTATIONS OR LIABILITIES, EXPRESS OR IMPLIED, ARISING BY LAW IN CONTRACT, TORT (INCLUDING NEGLIGENCE OR STRICT LIABILITY) OR OTHERWISE, INCLUDING BUT NOT LIMITED TO ANY CLAIMS ARISING OUT OF, CONNECTED WITH OR RESULTING FROM THE PERFORMANCE OF THIS LIMITED WARRANTY OR FROM THE DESIGN, MANUFACTURE, SALE, REPAIR, LEASE OR USE OF THE PRODUCT, ANY COMPONENT THEREOF AND SERVICES DELIVERED OR RENDERED HEREUNDER OR OTHERWISE.

IN NO EVENT, WHETHER AS A RESULT OF BREACH OF CONTRACT OR WARRANTY, ALLEGED NEGLIGENCE, OR OTHERWISE, SHALL RRSA BE SUBJECT TO LIABILITY FOR INCIDENTAL, CONSEQUENTIAL, INDIRECT, SPECIAL OR PUNITIVE DAMAGES OF ANY KIND, INCLUDING WITHOUT LIMITATION, DAMAGE TO THE PRODUCT, OR OTHER PROPERTY, COMMERCIAL LOSSES, LOST PROFITS, LOSS OF USE, INCONVENIENCE, LOSS OF TIME, COST OF CAPITAL, COST OF SUBSTITUTE EQUIPMENT, DOWNTIME, OR CLAIMS OF CUSTOMERS.

RRSA'S AGGREGATE TOTAL LIABILITY RELATING TO THE SYSTEM AND/OR PRODUCT UNDER THIS LIMITED WARRANTY OR UNDER ANY OTHER CLAIM (IN CONTRACT, TORT, OR OTHERWISE) MADE IN CONNECTION WITH THE SALE OR USAGE OF THE SYSTEM AND/OR PRODUCT IS LIMITED TO THE DOLLAR AMOUNT OF THE OWNER'S ORIGINAL PAYMENT MADE FOR THE SYSTEM AND/OR PRODUCT.

2. Limited Warranty Periods

Limited Warranty Period. The Limited Warranty Period for a Warrantable Defect in the Product is twenty-four (24) months after the first commissioning of the Product. In all cases, the Limited Warranty period will expire not later than thirty-six (36) months from the date of shipment from the RRSA designated facility or after 3,000 operation hours, whichever occurs first.

Accessories Coverage Period. The Accessories Coverage Period for a Warrantable Defect in cords, receptacles, cord reels, gas flex pipes, housing lights, space heaters, and associated equipment ("Accessories") is twelve (12) months from the date of shipment from RRSA designated facility.

RRSA warranty obligations under this Limited Warranty are contingent upon distributor completing the following:

(a) The RRSA warranty and the *Start-Up Validation and Pre-Inspection Form*. Return both to RRSA within forty (40) days of the start-up date; and
(b) The engine registration form (when applicable). Return to the manufacturer as stated in the engine registration form instructions.

3. RRSA Responsibilities

If a Warrantable Defect is found during the Limited Warranty Period and/or the Accessories Coverage Period, and provided the Owner has complied with its obligations under Section 4, RRSA will, during normal working hours, through an RRSA authorized distributor, dealer, or service outlet, perform some or all of the following:

(a) Repair or replace, at the sole election of RRSA, the defective part with a new or remanufactured replacement part;
(b) Provide reasonable or customary labor needed to correct the Warrantable Defect;
(c) Provide technician reasonable travel time to and from the closest RRSA authorized distributor, dealer, or service outlet to the Product location;
(d) Part removal and re-installation, if necessary and as solely determined by RRSA.

The obligation to repair or replace defective parts by RRSA does not include responsibility for reimbursement of incidental or consequential costs. If RRSA repairs or replaces an Accessory, part, or Product under this Limited Warranty, the repaired or replaced Accessory, part, or Product assumes the unexpired portion of the warranty period remaining from the original Accessory, part, or Product. Repair or replacement of an Accessory, part, or Product will not extend the term of the original Limited Warranty Period or Accessories Coverage Period. Parts or Product replaced shall become the property of RRSA.

Failure of RRSA to enforce any of the terms or conditions stated herein shall not be construed as a waiver of such provision or of any other terms and conditions of this Limited Warranty.

4. Owner Responsibilities

During the Limited Warranty Period and Accessories Coverage Period, the Owner is responsible for, and RRSA will not reimburse for the following:

(a) Battery;
(b) Premium or overtime labor costs;
(c) Labor and material costs for Product removal and reinstallation;
(d) Any special access fees required to gain access to RRSA equipment, without limitation, training or safety policy requirement to gain access;
(e) Transportation costs or travel expenses related to delivery of the Product to the designated distributor, dealer, or service outlet;
(f) Incidental and consequential costs, damages, or administrative expenses of whatever nature;
(g) Non-Product repairs, vehicle damage, “downtime” expenses, cargo damage, fines, lost income, any business costs of any kind, Owner’s travel expenses, and other losses resulting from a Warrantable Defect;
(h) Shipping charges for replacement parts/Products in excess of those which are usual and customary; or
(i) Local taxes, if applicable.

In addition, Owner must:

(a) Operate, use, and maintain the Product in accordance with the applicable Owner’s manual and/or any other manuals specified by RRSA, including without limitation handling, inspection, servicing, or operating instructions;

(b) Promptly notify RRSA or its authorized representative of a Warrantable Defect and make the Product available for repair;
(c) Comply with RRSA or its authorized representative's reasonable directions regarding the timing, sequence, and location of warranty repairs and make the Product available for inspection;
(d) Perform all required maintenance and maintain and provide proof that all required maintenance has been performed;
(e) Use RRSA specified parts, components, and consumables;
(f) Promptly return to RRSA all parts replaced under this Limited Warranty;
(g) Comply with RRSA long term storage guidelines, if applicable, and maintain and provide proof of compliance;
(h) Routinely exercise the Product in accordance with operating instructions;
(i) Install the Product in accordance with the installation guide provided; and
(j) Reimburse RRSA for all costs incurred in providing warranty service where, following examination, the request or claim for warranty coverage proves to be unfounded or excluded, as well as all incidental costs including those incurred investigating the claim.

5. Limitations

RRSA is not responsible, and this Limited Warranty is not available under any circumstances, for any of the following:

(a) Failure of Owner to fulfill its obligations under Section 4;
(b) Failure of Owner to follow RRSA instructions for Product stored by Owner longer than 180 days from date of shipment from the RRSA designated facility;
(c) Defects caused by adjustments made by Owner to the fuel system or governor system;
(d) Defects which were obvious or capable of being identified by reasonable inspection and were not reported to RRSA within a reasonable time;
(e) Rental equipment used during warranty work;
(f) Defects caused or potentially caused by service work performed by non-RRSA authorized service providers and/or the use of non-genuine RRSA parts;
(g) Defects resulting from natural wear and tear, external action, negligence, natural disasters, accidents, incorrect use, improper handling or storage, inadequate corrosion-proofing, incorrect assembly or installation, or modification of the Product;
(h) Defects resulting from abuse or neglect, including unauthorized modifications to the Product;
(i) Repair or any use or installation which RRSA, in its sole discretion, determines to be improper;
(j) Defects caused by incorrect maintenance;
(k) Defects resulting from Owner's delay in making the Product available after being notified of a potential problem or Owner's failure to take immediate measures to avoid or mitigate damage;
(l) Damage caused by shipping;
(m) Repair of parts sold by RRSA that are warranted directly to the Owner by the respective part's manufacturer;
(n) Misapplication of the Product;
(o) Diesel engine "wet stacking" due to lightly loaded diesel engines;
(p) Acts of nature or acts of God;
(q) Any failure, other than those resulting from a defect in material or factory workmanship of the Product;
(r) Use of the Product for purposes other than those for which it was intended, including without limitation use of the Product under extraordinary operating conditions not made known to RRSA in writing at the time of the order; or
(s) Material provided by or a design specified by the Owner.

6. Software Warranty. Where software is included in the Product, RRSA warrants to the Owner that 1) the software will be substantially free from material program errors and material defects in material and workmanship, and that 2) it shall

function substantially in accordance with RRSA specification at the time of dispatch from the RRSA manufacturing facility. RRSA does not warrant that the software is error-free or free from "bugs" as commonly categorized by the computer industry. RRSA shall, during the Limited Warranty Period, endeavor to remedy at its cost, in its sole discretion, by repair or replacement of any material program errors or material defects of which Owner has promptly notified RRSA. RRSA, at its option, may elect to provide the most current software at no cost, and in such case RRSA will not cover the cost to install the applicable updated software. RRSA shall have no obligation with respect to any nonconformities resulting from unauthorized modifications to the software or any Owner interfacing.

7. **Emissions Warranty.** The Product may be covered under an emissions warranty specified by the U.S. Environmental Protection Agency and/or the California Air Resources Board. The terms of the warranty, if applicable, may be accessed by following the link: https://www.mtu-solutions.com/eu/en/technical-information/emissions-warranty.html. Any such Emissions Warranty is incorporated herein by reference in its entirety to the extent and with the same force as if fully set forth herein. The Product, if certified, may only be certified to comply with the required country or region-specific emission regulations. Where applicable, the Product is only certified to those specific emission regulations/standards which are clearly stated in the respective RRSA defined technical specifications. IT IS THE OWNER'S SOLE RESPONSIBILITY TO ENSURE THAT THE EXPORT/IMPORT, INSTALLATION, AND USE OF THE PRODUCT(S) COMPLIES WITH THE APPLICABLE EMISSION REGULATIONS IN THE COUNTRY OR REGION WHERE THE PRODUCT(S) WILL BE USED.

8. The Owner is entitled to rectify the defect or to have it rectified by third parties only in urgent cases where operational safety is at risk or in order to prevent disproportionately extensive damage; provided that Owner has informed RRSA and obtained prior written consent from RRSA. In such cases, RRSA shall, in its sole discretion, reimburse the costs incurred by the Owner up to an amount equivalent to the costs RRSA would have incurred had it remedied the defect itself.

9. This Limited Warranty gives the Owner specific legal rights, and the Owner may also have other rights, which vary from state to state. Some states do not allow warranty duration limitations and/or certain exclusions or limitation of incidental or consequential damages. Therefore, the previously expressed exclusion(s) may not apply to Owner. If any one or more of the provisions contained in this Limited Warranty shall be invalid, illegal, or unenforceable in any respect, the validity, legality, or enforceability of the remaining provisions contained therein shall not in any way be affected or impaired thereby.

10. This Limited Warranty is governed by the laws of the State of Michigan without regard to its conflicts of law principles and excluding the United Nations Convention for the International Sale of Goods. Any and all disputes between the parties that may arise pursuant to the sale or use of the Product shall be heard and determined before an appropriate state of federal court located in Oakland County, Michigan. The Owner acknowledges that such court has the jurisdiction to interpret and enforce the provisions herein, and Owner waives any and all objections that it may have as to personal jurisdiction or venue in any of the above courts.

11. In order to obtain performance of an RRSA warranty obligation, the Owner should contact the nearest RRSA authorized distributor, dealer, or service outlet for instructions. To find the location of the nearest RRSA authorized distributor, dealer, or service outlet call +1 248-560-8000 or write to: Rolls-Royce Solutions America Inc. Warranty Department, 39525 MacKenzie Drive, Suite 100, Novi, MI 48377.



Power Generation

PERFORMANCE ASSURANCE CERTIFICATION

A Rolls-Royce solution

TESTING PROCEDURES

Prototype

We have been producing superior generator sets for more than six decades. Understanding the importance of reliable, cost-effective products, we have developed industry-leading test procedures to ensure we exceed this criteria. Our testing program confirms that our customers will receive products of the highest quality.

Our Performance Assurance Certification (PAC) certifies that every ***mtu*** generator set undergoes rigorous prototype testing including the following:

Prototype Test Procedures

- **Rated Load (NFPA 110)**
  All generator set models will produce the nameplate-rated load within the design tolerance of the generator set.
- **Extended-run Testing**
  All generator set prototypes have been subjected to extended run-time testing.
- **Transient Response Analysis (ISO 8528-5)**
  All new generator set models have undergone transient response analysis per ISO 8528-5.
- **Torsional Analysis**
  All generator set models have undergone torsional stress analysis.
- **Engine Cooling System**
  All generator set models will cool sufficiently within the ambient design conditions per each model.
- **Anticipatory Alarms and Shutdowns**
  The pre-alarms and alarms function appropriately to protect the generator set from any foreseen unnecessary failures.
- **Vibrational Analysis (ISO 8528-9)**
  All new generator set models have undergone vibration analysis to ensure that each engine-generator coupling is balanced and that there is no destructive resonant vibration.
- **Noise Analysis (ISO 8528-10)**
  All generator sets undergo airborne noise analysis using the enveloping surface method.

Prototype Test Standards

mtu generator sets are compliant with many different codes and standards. Our validation philosophy and performance are regularly reviewed to ensure continuity with these codes and standards: *UL2200, CSA, EPA, NFPA 99—Health Care Facilities, NFPA 70—National Electrical Code, NFPA 110—Standard for Emergency and Standby Power Systems, Department of Labor and Industry, NEMA MG 1—Motors and Generators, and MIL-STD-705-c.*

Factory Acceptance

Our factory testing is performed with the same extreme diligence and attention to detail that is given to the prototype testing process. Every *mtu* generator set receives a complete factory acceptance test that certifies and ensures the system will function in accordance to every specific application.

Test metering has an accuracy of 1.3% or better. This metering is calibrated a minimum of once per year and is directly traceable to the Bureau of Standards.

Factory acceptance testing procedures

- **Insulation Resistance Inspection** (301.1c)*
- **High Potential Test** (302.1b)*
- **Alternator Overspeed** (1 min.)*
- **Engine Inspection**
- **Generator Inspection**
- **Resistances Inspection** (401.1b)
  - Exciter Field Stator
  - Alternator Armatures
- **Mounting and Coupling Inspection**
- **Engine Fuel Oil System Inspection**
- **Engine Lube Oil System Inspection**
- **Engine Cooling System Inspection**
- **DC Charging System Inspection**
- **Circuit Breaker Inspection**
- **Anticipatory Alarms and Shutdowns Inspection** (505.2b, 515.1b, 515.2b)
- **Optional Equipment Inspection** (513.2a)
- **Load Test Inspection**
  - Full Nameplate-Rated Load
  - No-Load Inspection
  - MAX Load @ 1.0 P.F. (640.1d)
  - MAX Load @ 0.8 P.F.
  - Block Loads @ 0–25%, 0–50%, 0–75%, 0–100%
- **Phase Balance and Sequence Inspection** (507.1d, 508.1d, 516.1a)

** Performed by Alternator OEM*

Subject to change. | Edition 02/22

Rolls-Royce Group
www.mtu-solutions.com